Pre-injector Upgrade Updates (15 Feb 2012 – 29 Feb 2012)

C.Y. Tan

29 Feb 2012

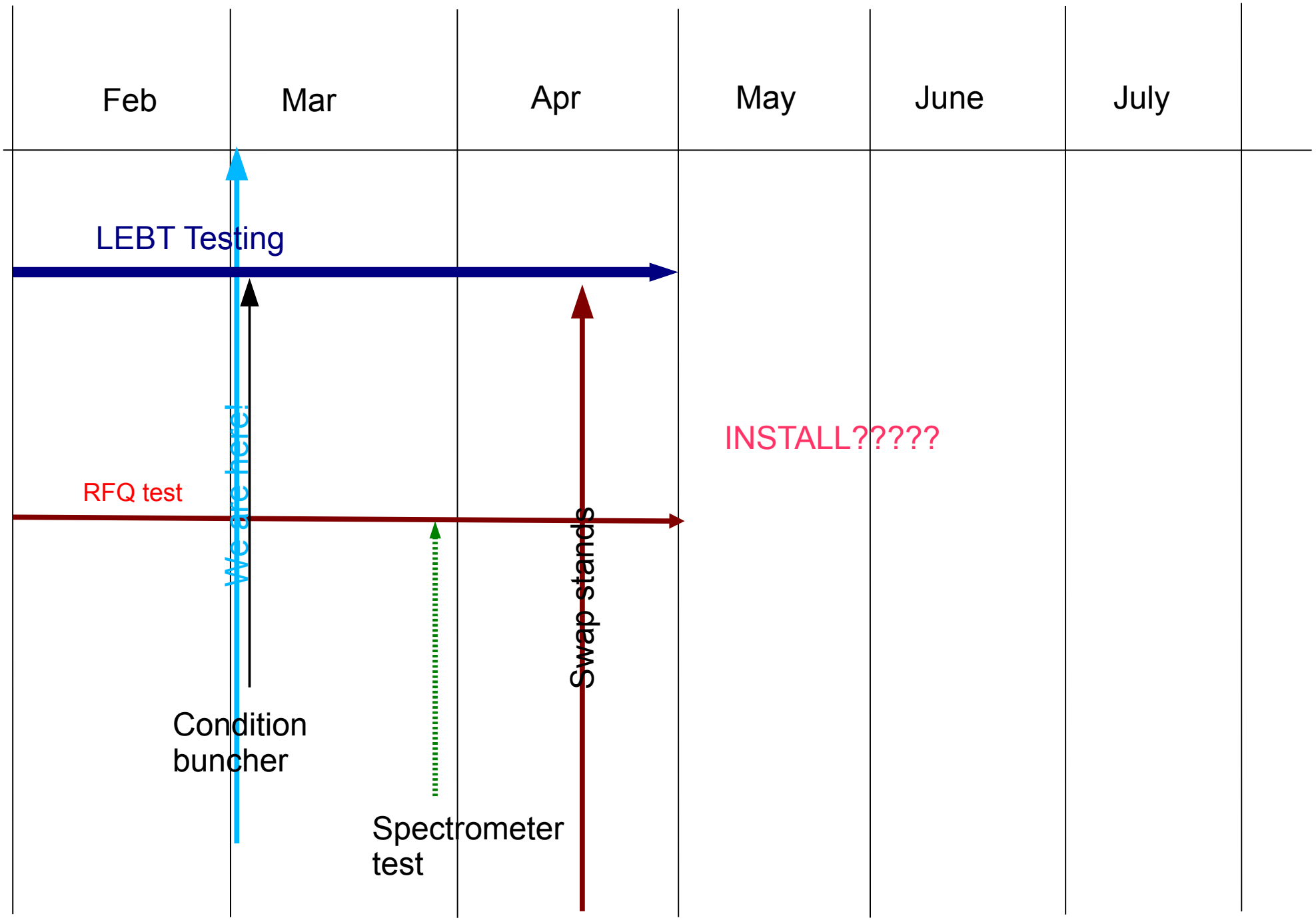
Feb
Mar
Apr
May
June
July
LEBT Testing
We are here!
RFQ test
Condition buncher
Spectrometer test
Swap stands
INSTALL?????

Latest

- Opened RFQ for inspection
- Connected Emittance probes to end of LEBT.
- Dipole magnet being measured at MTF for spectrometer.

Plans

- Survey RFQ rods
- Complete emittance measurements of present source.
- Install new source
- Install new vacuum tee in LEBT.
- High power condition buncher.

REV	DESCRIPTION	DRAWN	DATE
		APPROVED	DATE

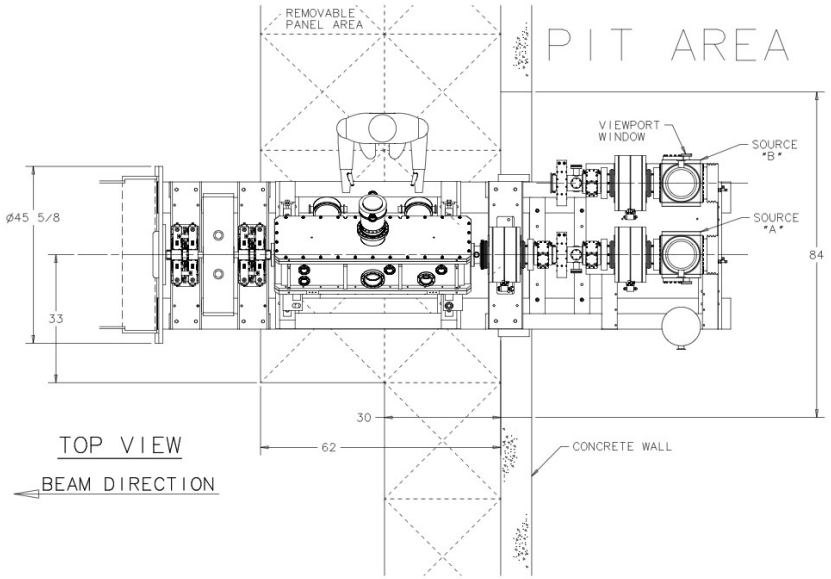

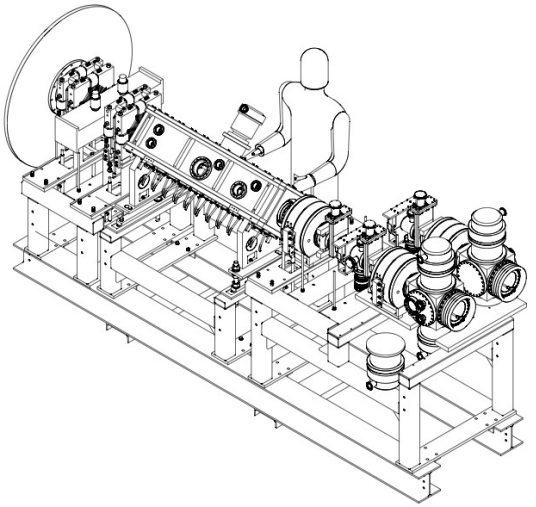

Really? Measured 47”

If we use 8” I beam, we will be >= 47.5” high

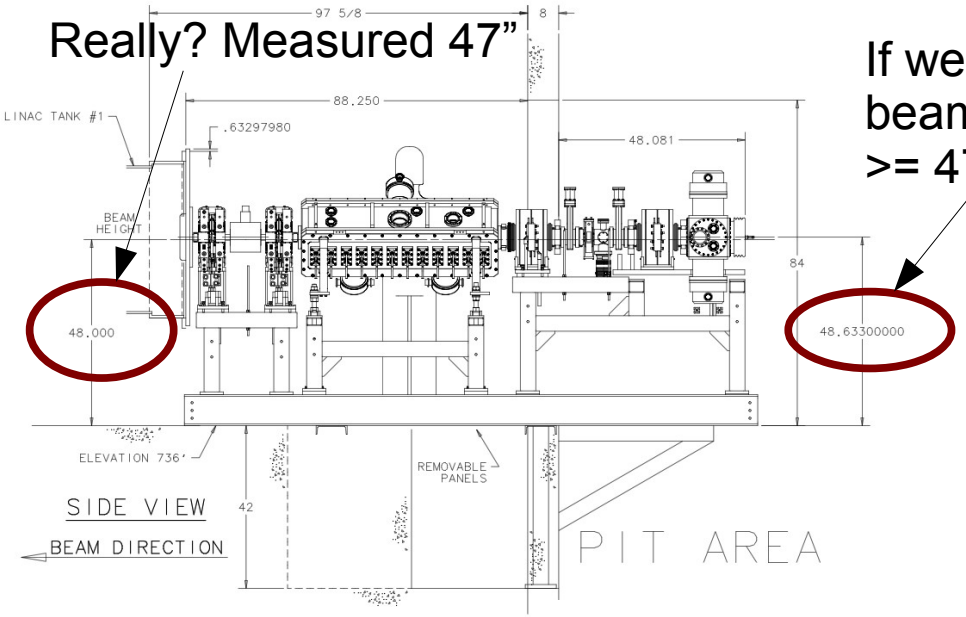

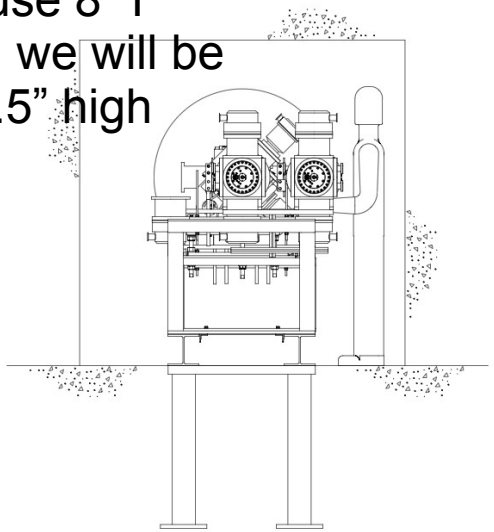

PREACCELERATOR PRELIMINARY LAYOUT

APRIL 27, 2011

UNLESS OTHERWISE SPECIFIED	ORIGINATOR	
± ± ±	DRAWN	
	CHECKED	
1. BREAK ALL SHARP EDGES .MAX. 2. DO NOT SCALE DRAWING. 3. DIMENSIONS BASED UPON ASME Y14.5M-1994 4. MAX. ALL MACH. SURFACES √ 5. DRAWING UNITS: U.S. INCH	APPROVED	
	USED ON	
	MATERIAL	

FERMI NATIONAL ACCELERATOR LABORATORY
UNITED STATES DEPARTMENT OF ENERGY

SCALE	DRAWING NUMBER	SHEET	REV
	. — —	1 OF 1	

CREATED WITH : GROUP :

Created: 10:31:09 on 28-06-11 (D-M-Y) By: mkielar State: 1-INITIAL

Source Status

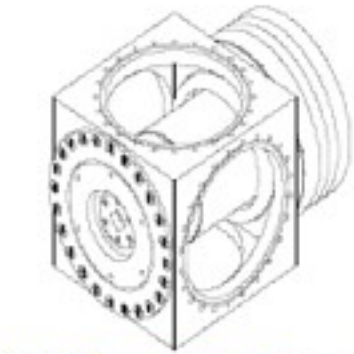

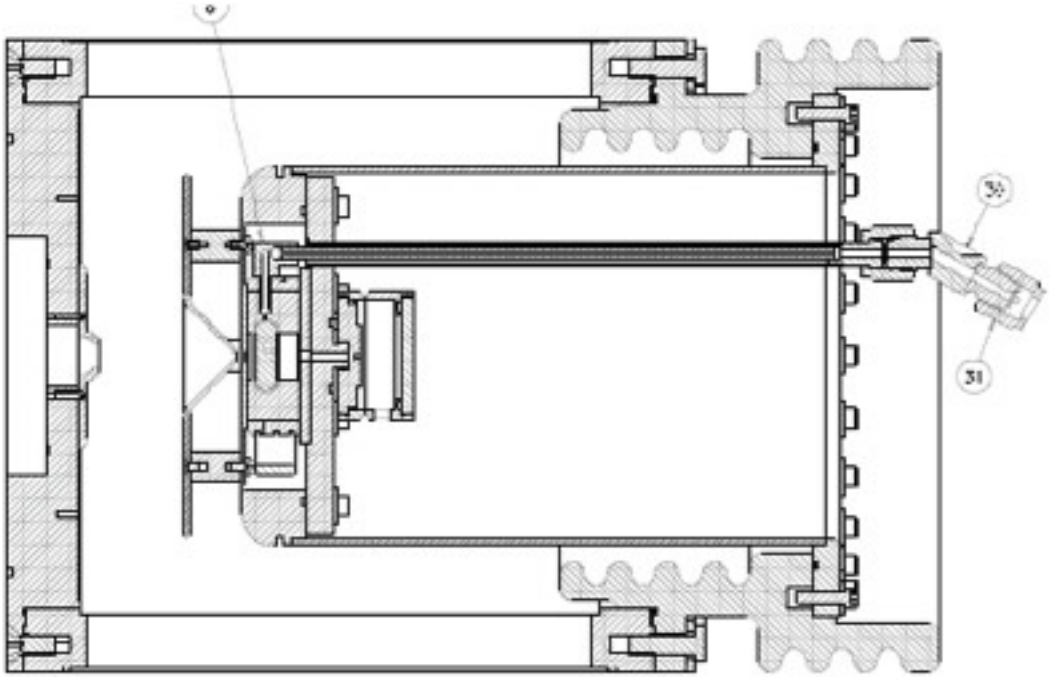

Device	Status	Comments
Source	Tuning continues …	Sparking at 35 keV continues

LEBT Status

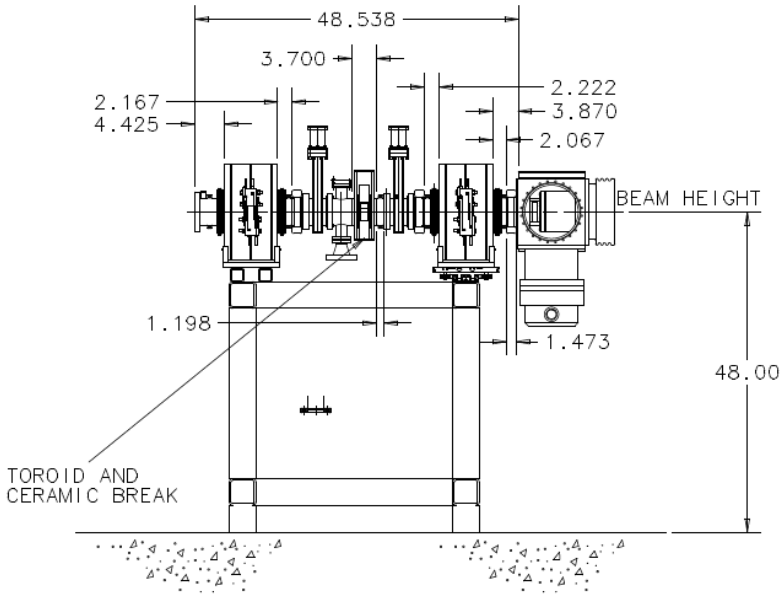

Device	Status	Comments
New slide	being designed	Expect to have by mid March 2012
Einzel lens testing	Successful!	
Correctors	Last set of spare correctors done.	Here this week

Emittance Probes at end of LEBT

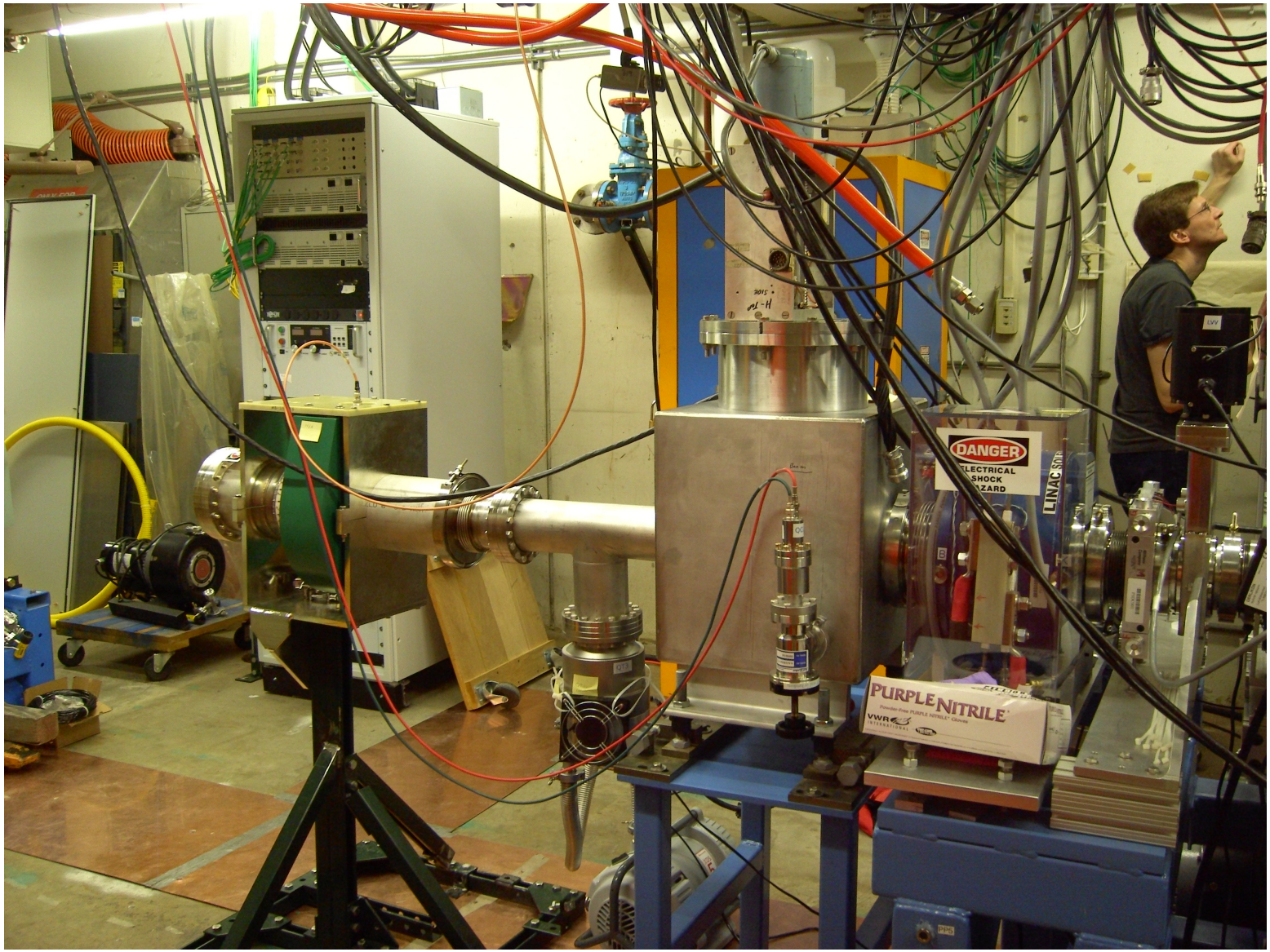

Using nominal settings for RFQ transport

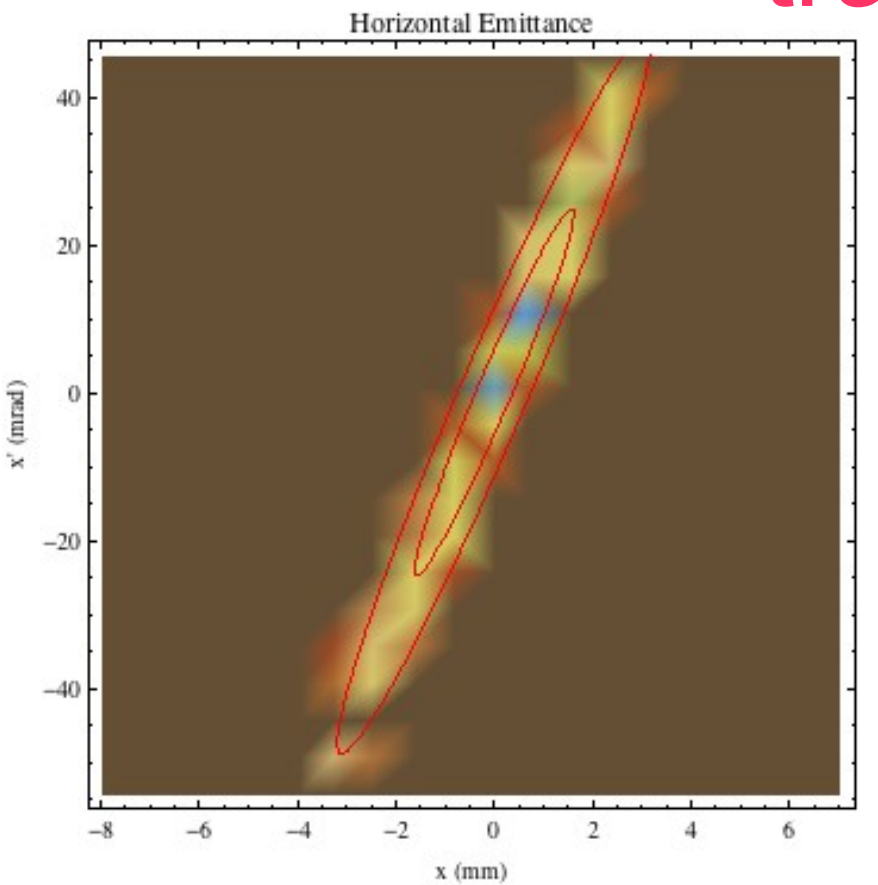

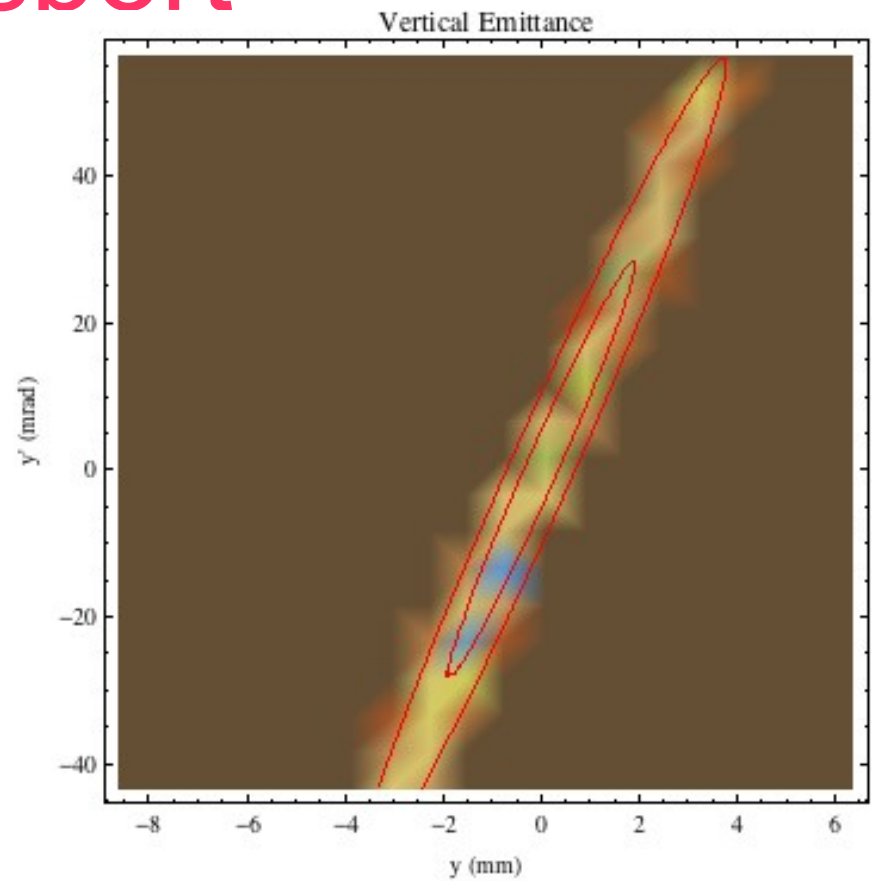

Note that beam is clearly truncated in both planes!
Therefore, emittance calculations are too small,
(0.8 pi mm mrad, 1 sigma normalized)
Beam is at 35 keV, 60 mA.

40 mA beam current, 24 keV extraction

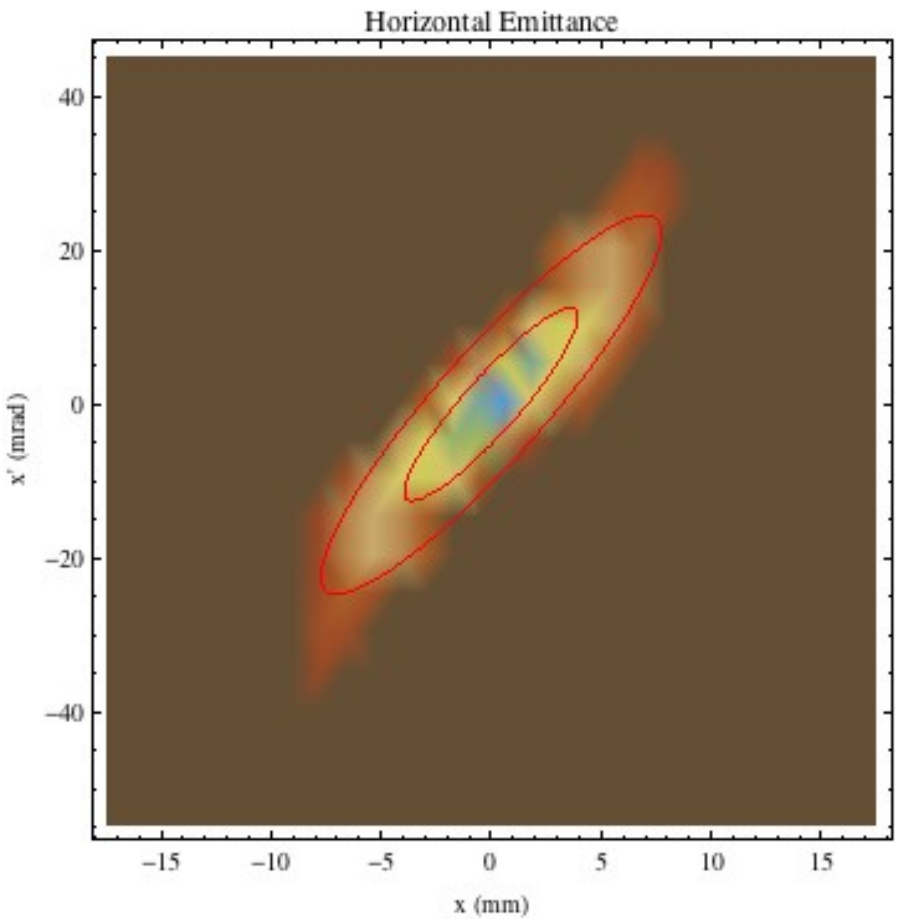

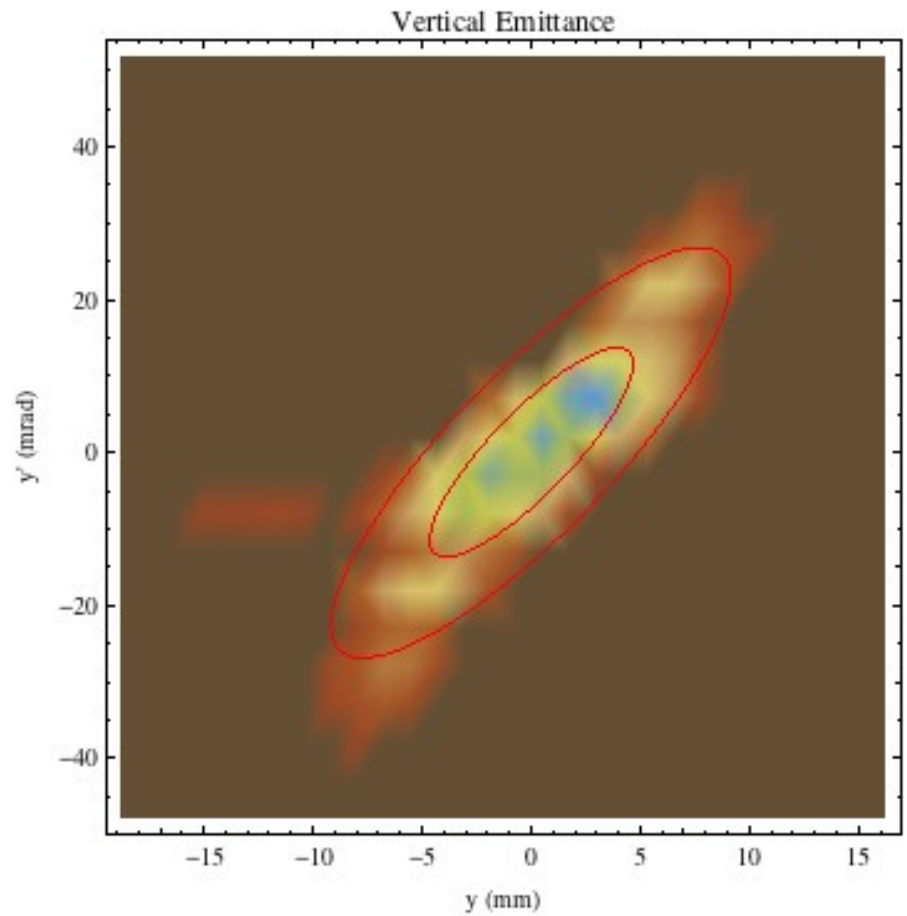

Emittances are assymetric!
Horz is 0.15 pi mm mrad 1 sigma normalized.
Vert is 0.25 pi mm mrad 1 sigma normalized.

Vert is 1.7x LARGER than horz!

Einzel lens switches in test room

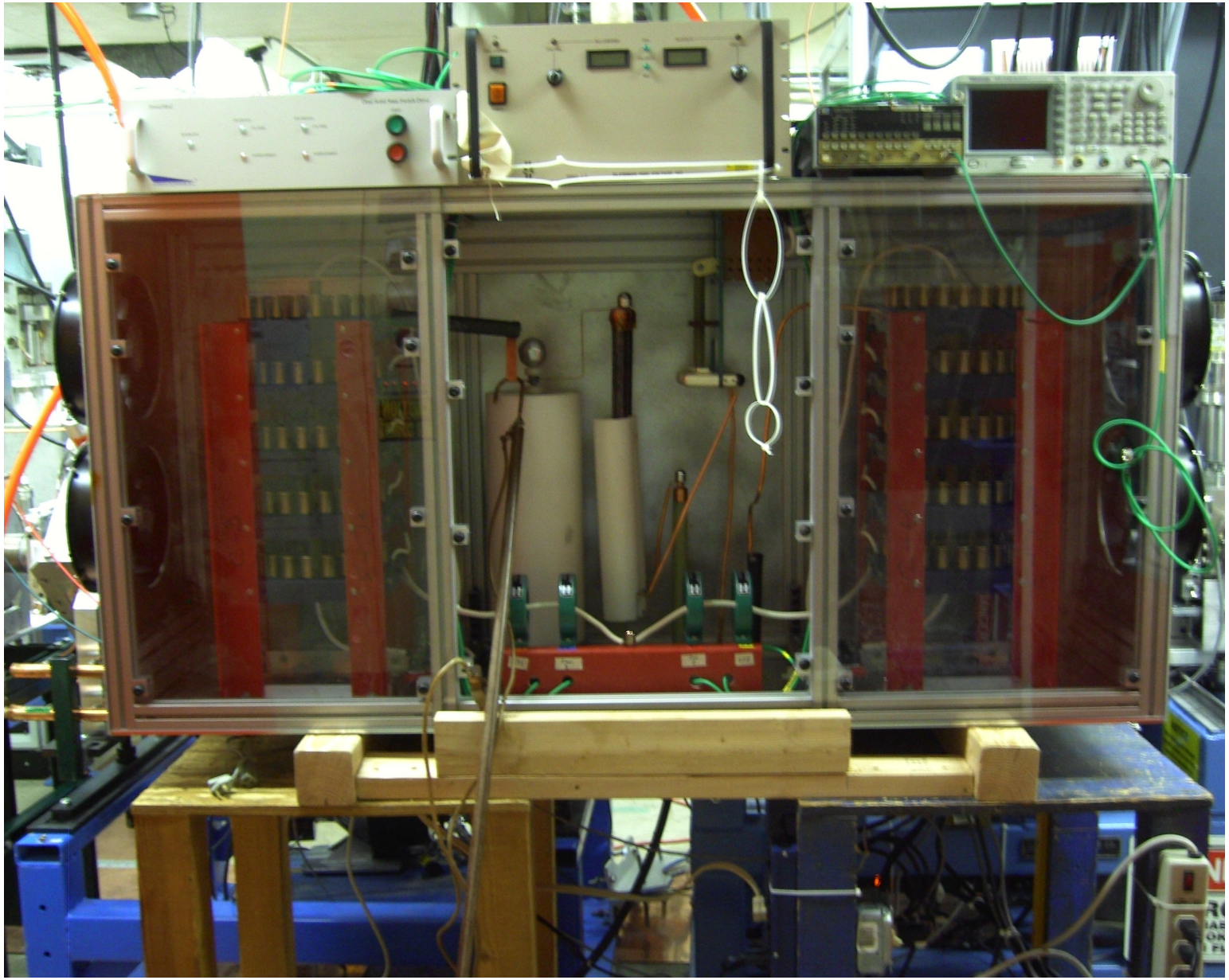

Chopping demonstration

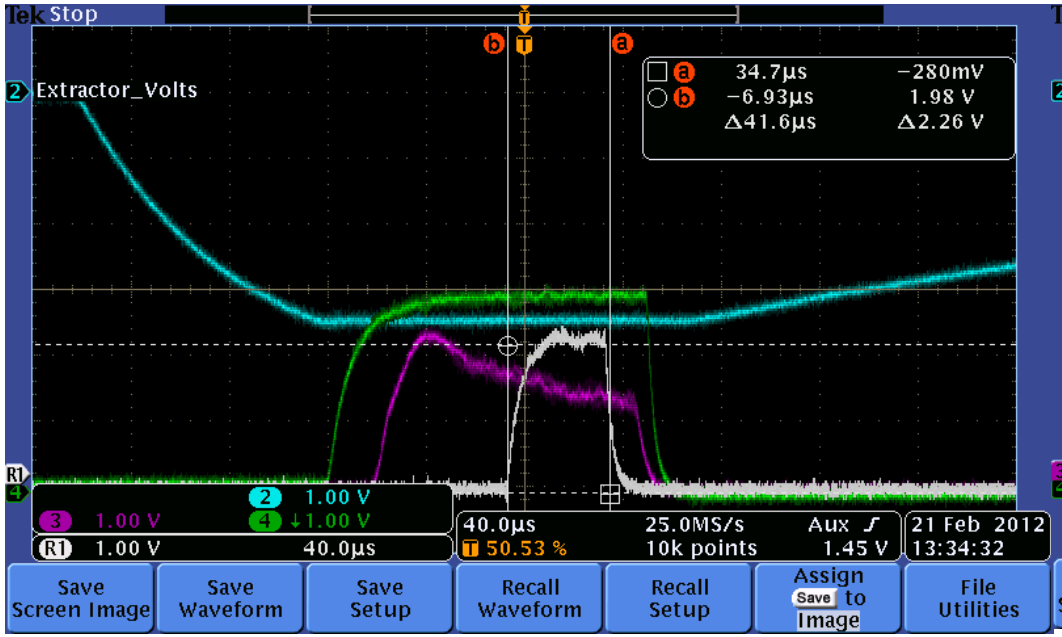

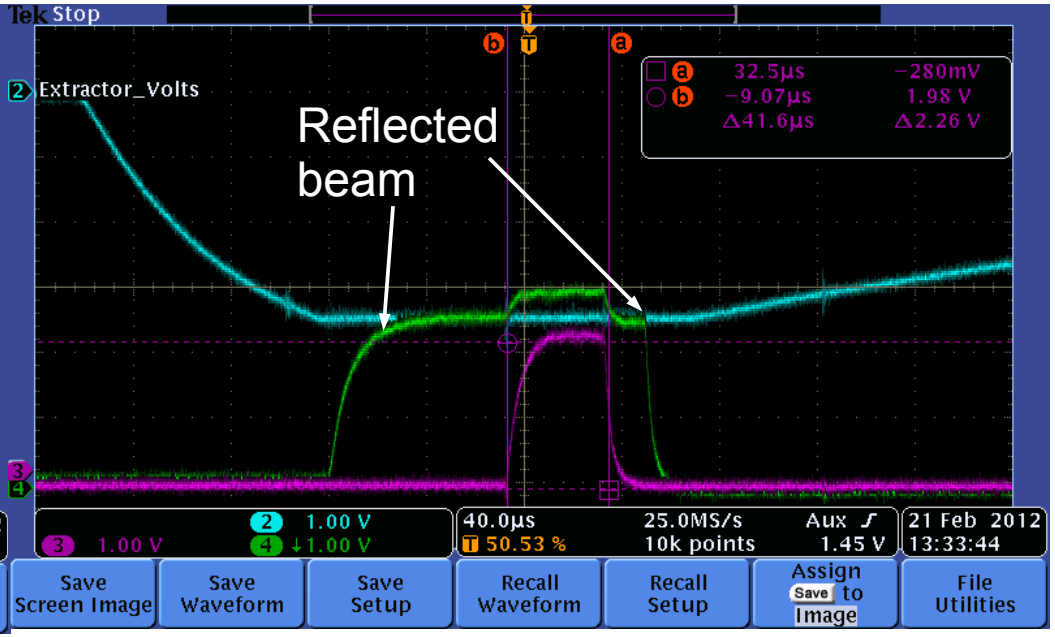

~1 kV is left behind when the chopper is "off". Better focusing. The above was done at 150 kW, bunching not optimum

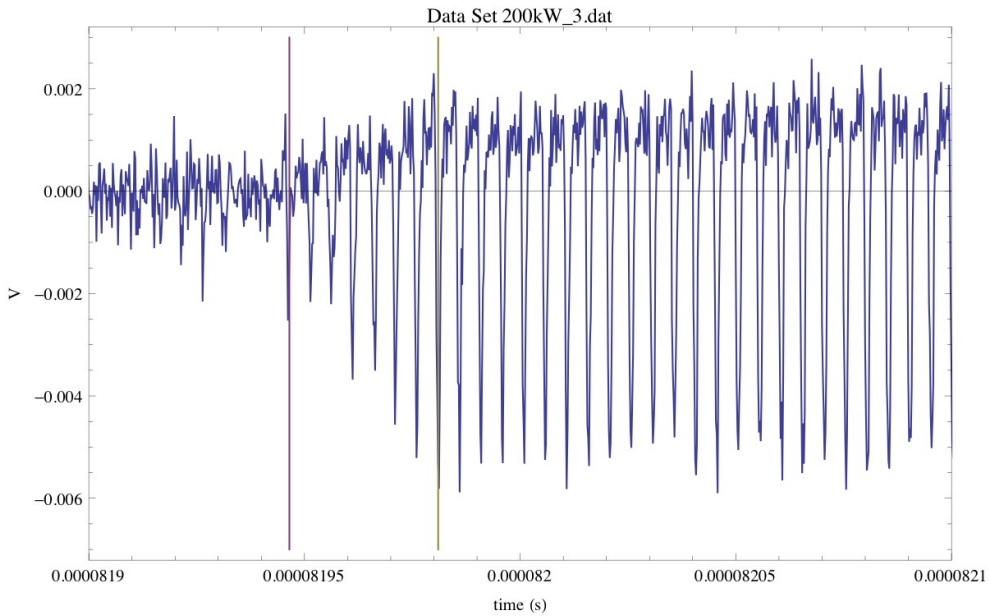

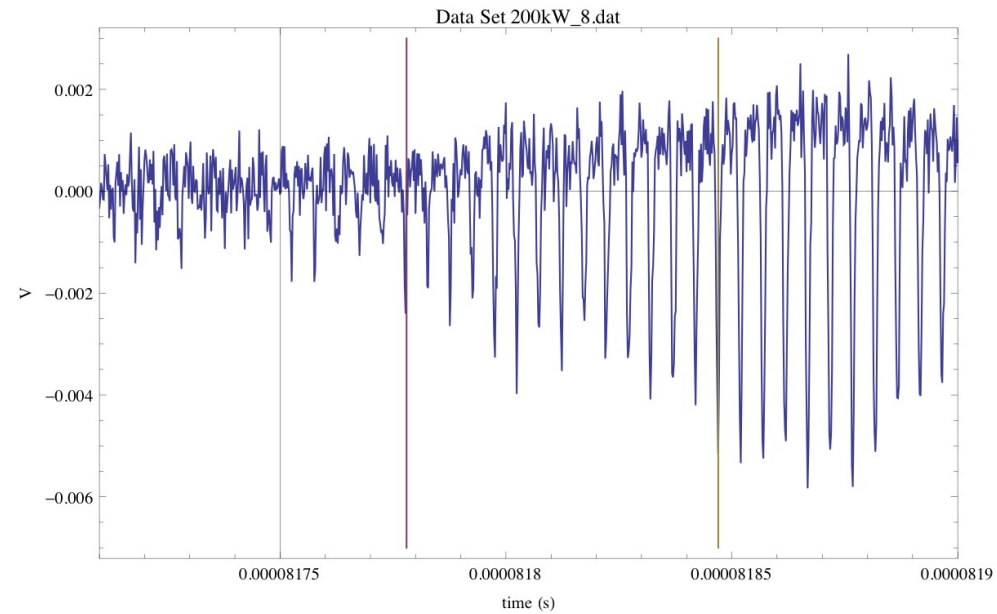

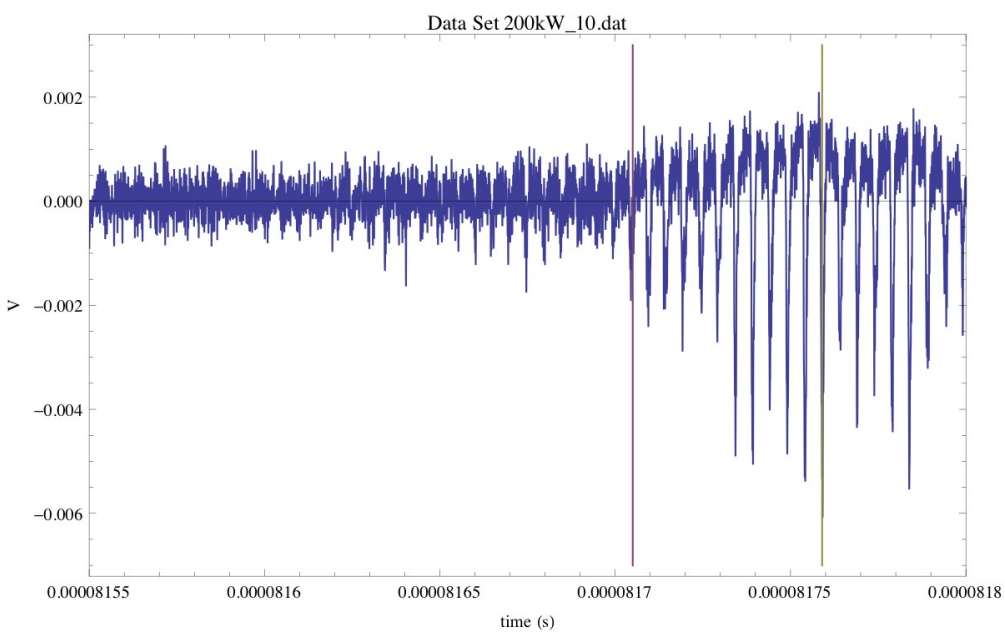

Rise time from the best data sets that I can guess at the first bunch show that it is < 100 ns.

MEBT Status

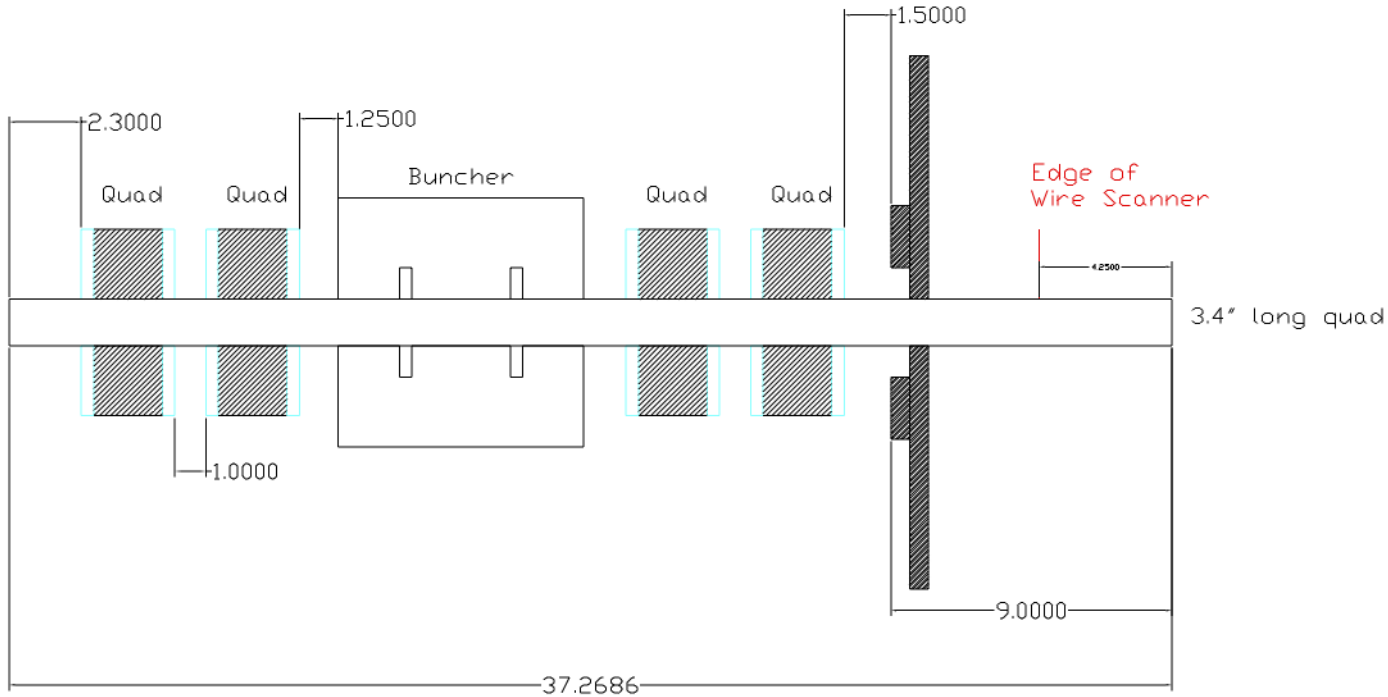

Device	Status	Comments
MEBT Stand	Being designed	
Quad doublets	Being paired and tested	More pitch and yaw engineering. Still on 1st doublet. (07 Feb)
Buncher	low power conditioning complete	

Are we buying PA for buncher?
Ion pump, controller gauging status?

Buncher readied for low power conditioning

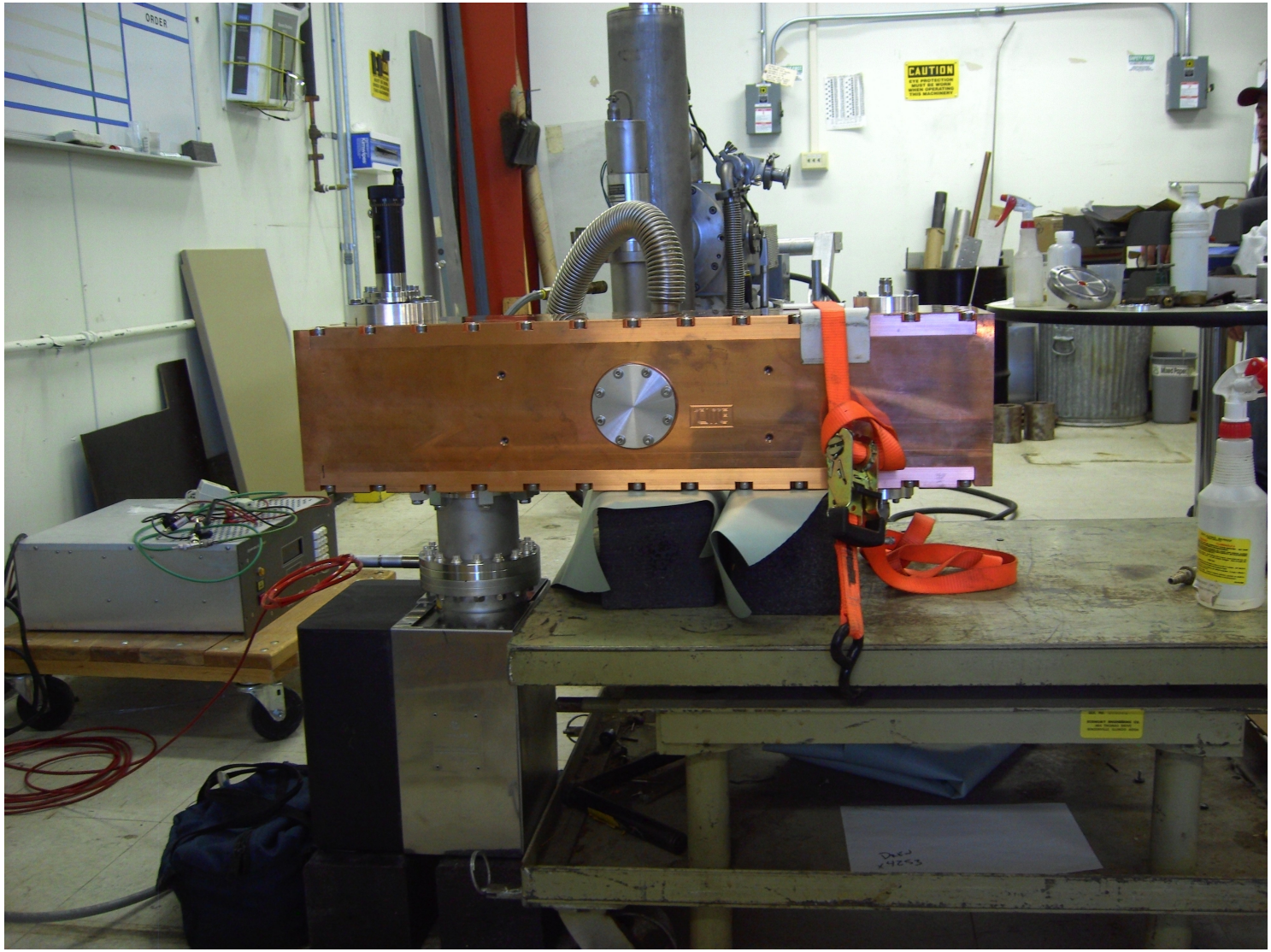

Vacuum Pressure during conditioning

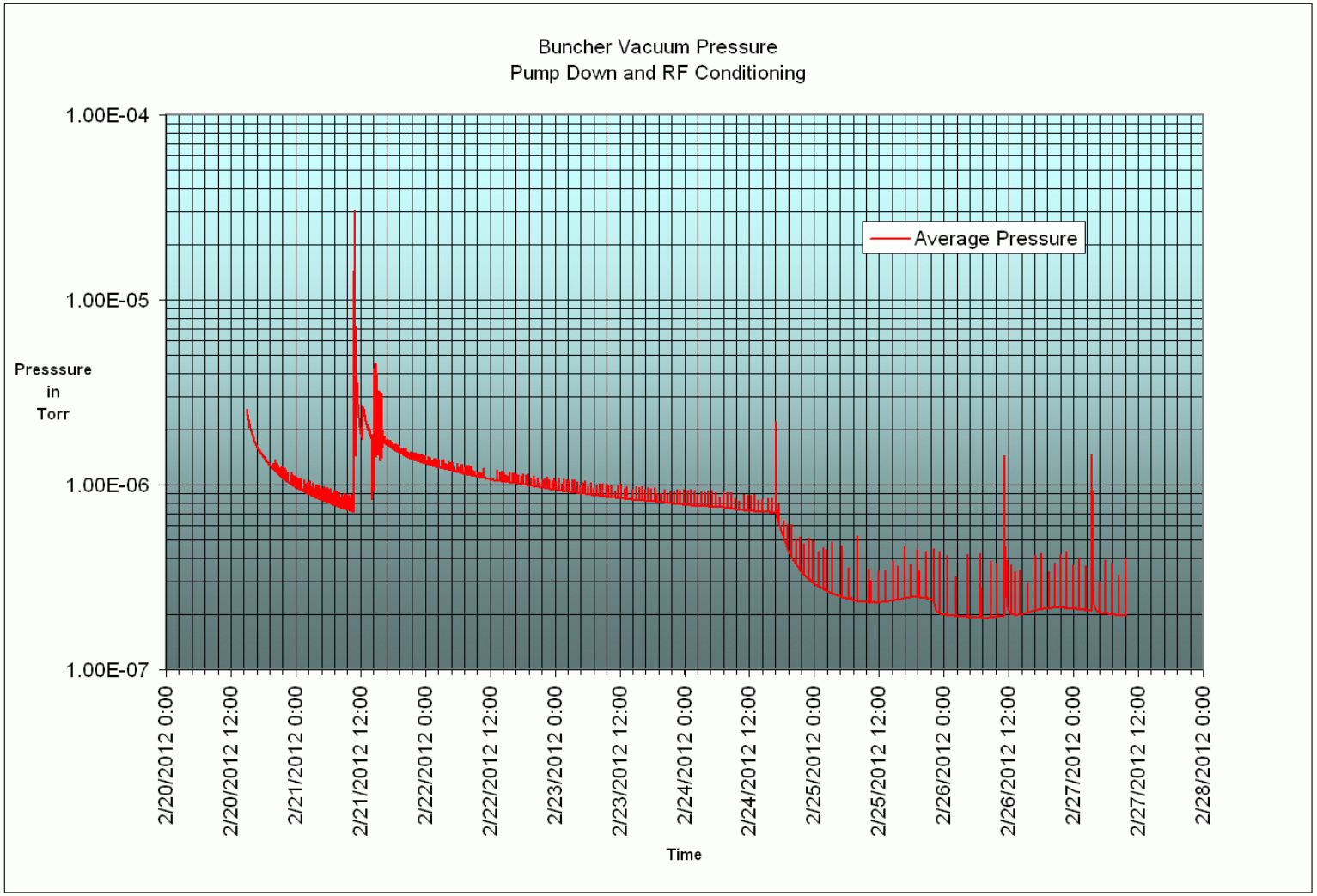

70W CW conditioning.

Spikes from ion pump ps?

RFQ Status

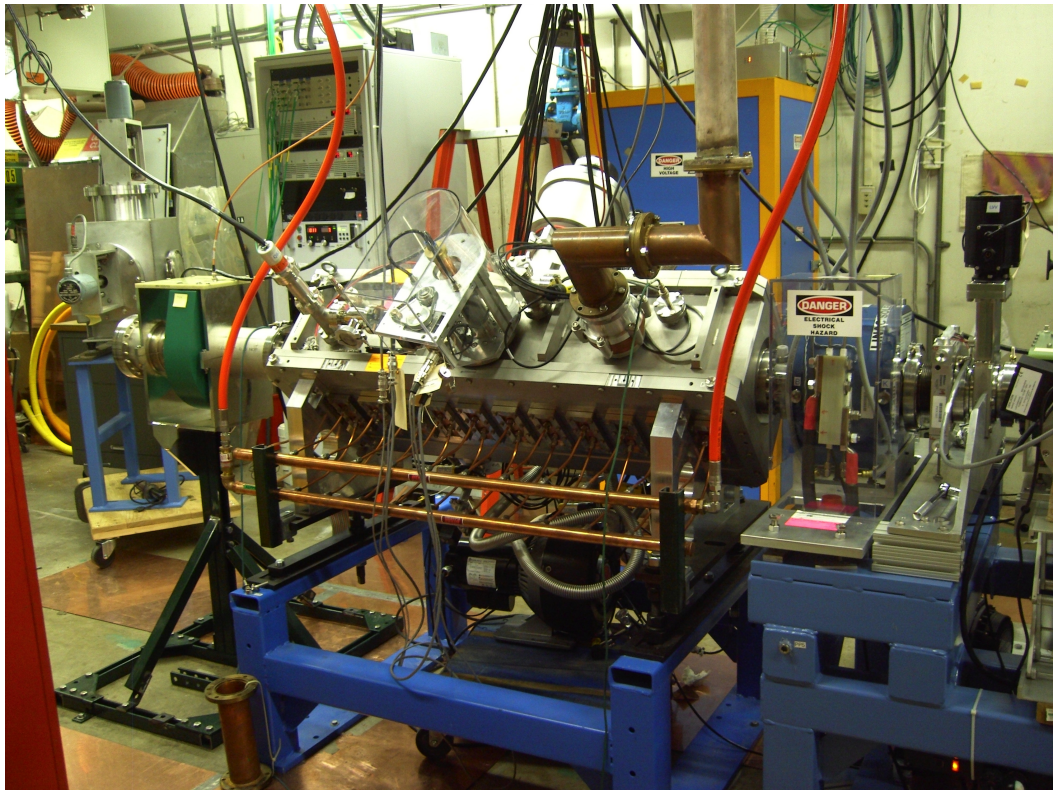

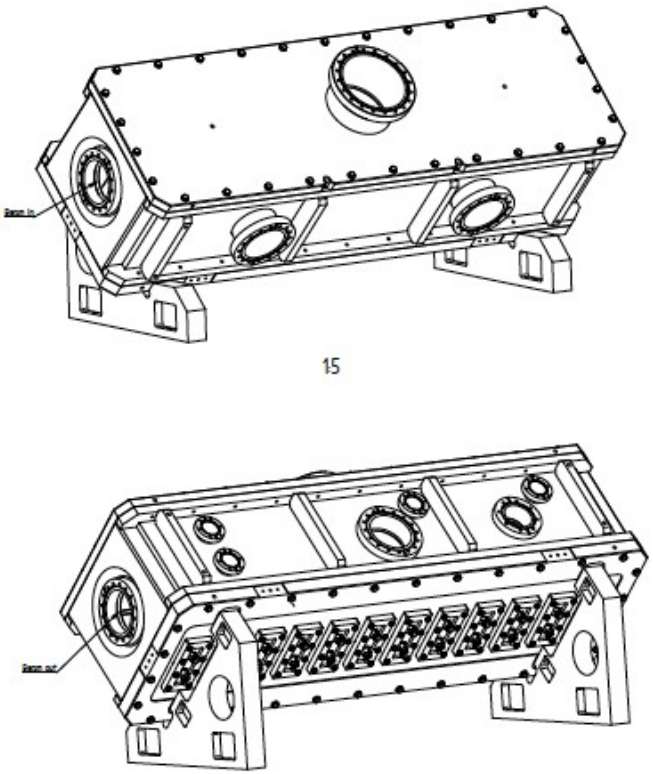

Device	Status	Comments
PLL work	Continues …	
1000 L/s turbo failed	Overheated (17 Feb)	2-4 weeks for refurbishment

Scorch Marks on nearly every vane tip

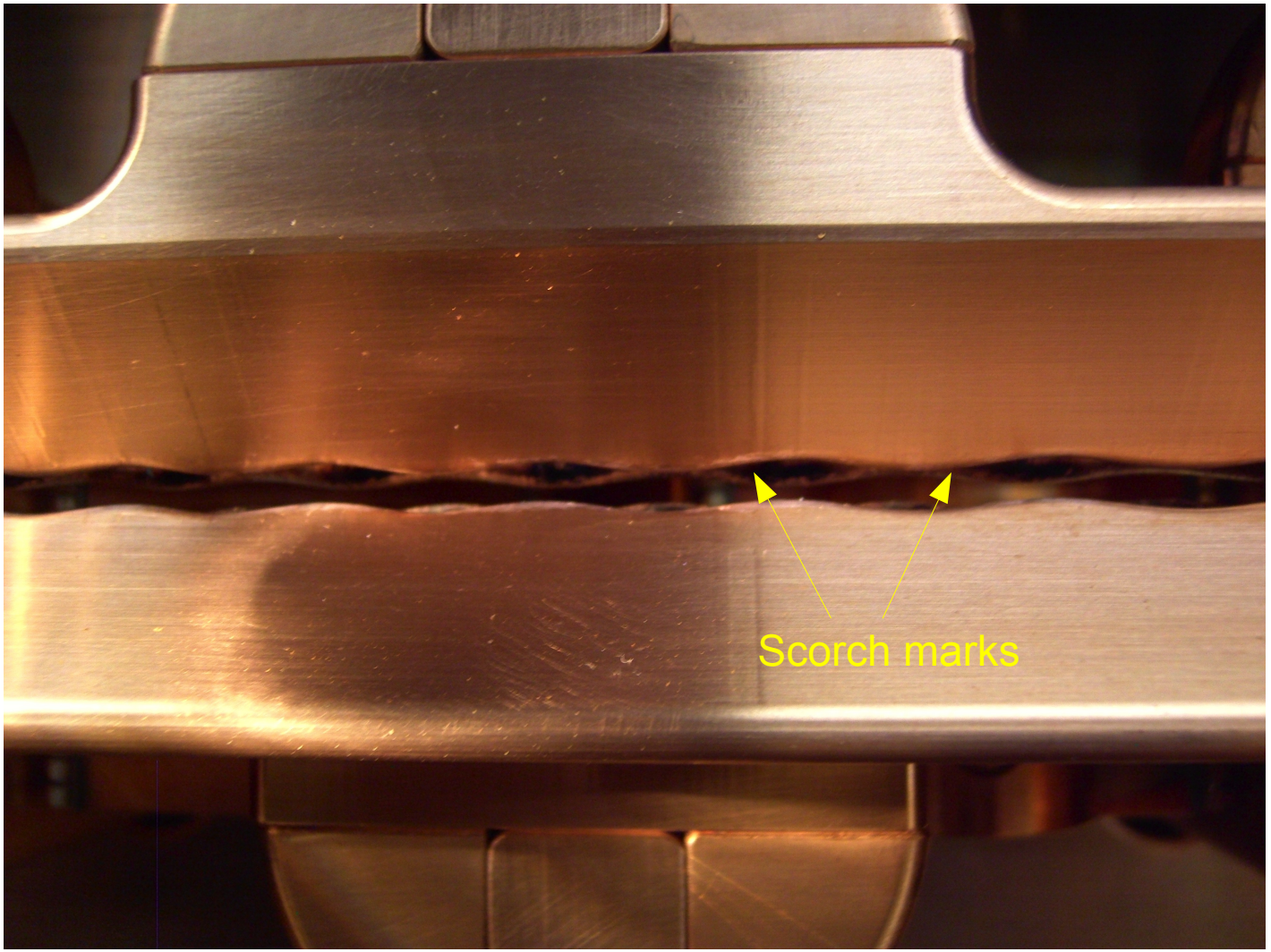

Notice that the top surfaces are clean.

See next few slides

Zooming in

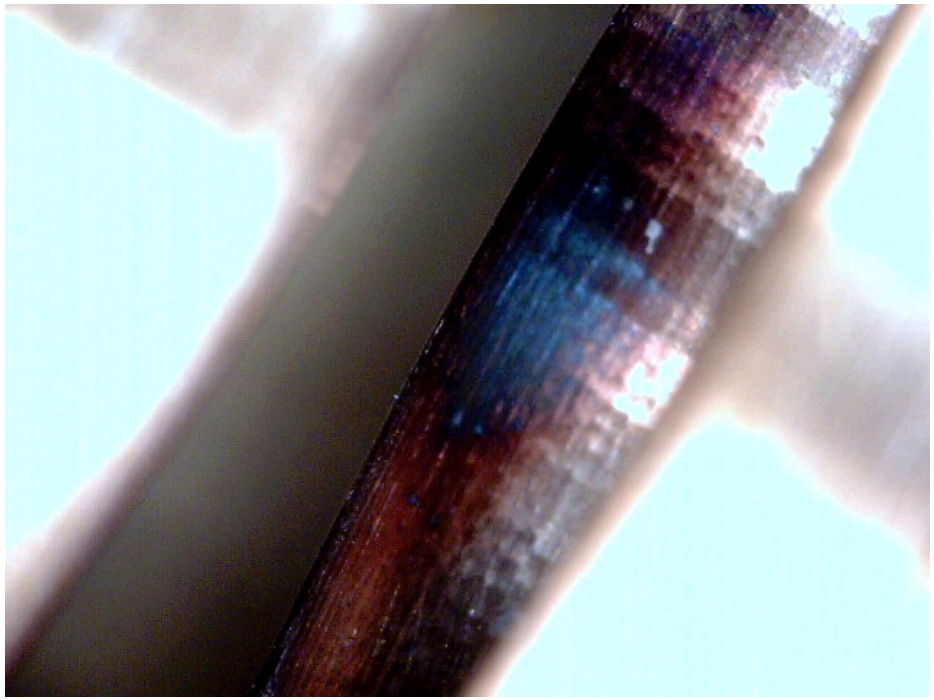

Zooming in on the scorch marks visible on from the top.

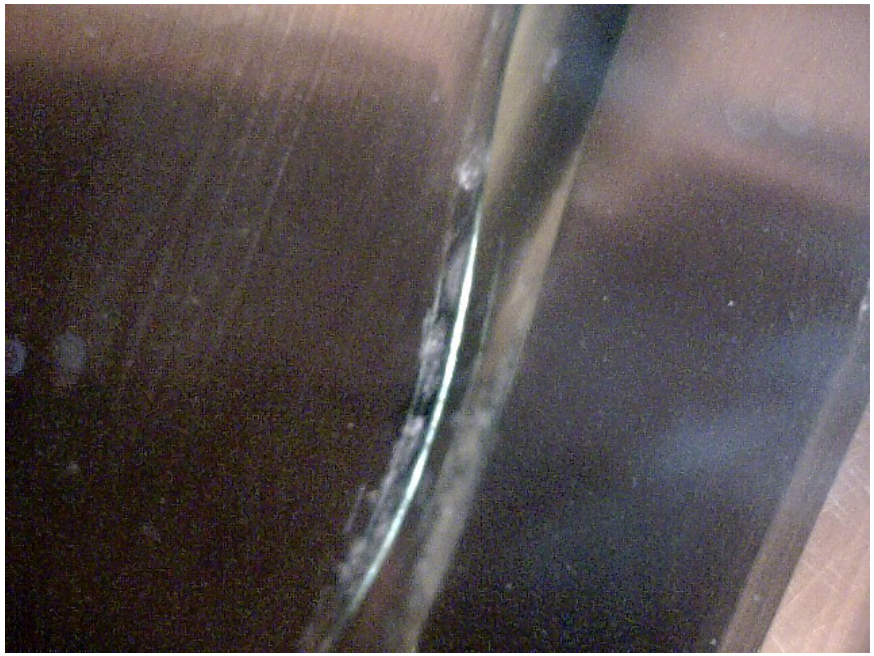

Zooming in on the bottom side of the same vane:

There are scorch marks here but they are silver and not black.

Zooming in

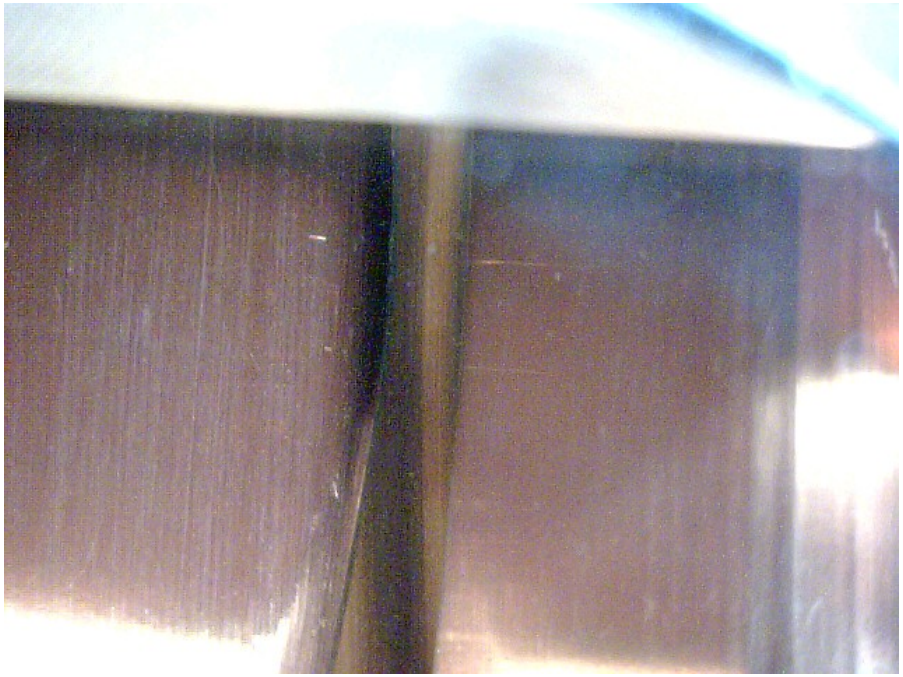

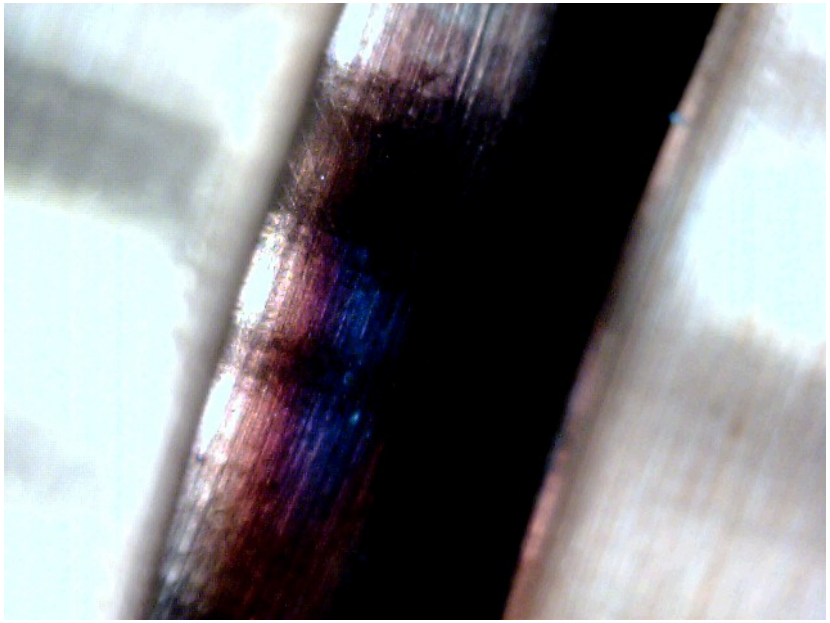

Zooming in to rods visible on the top but do **not** have scorch marks

However, on the bottom side, the scorch marks are visible.

Pictorial Summary

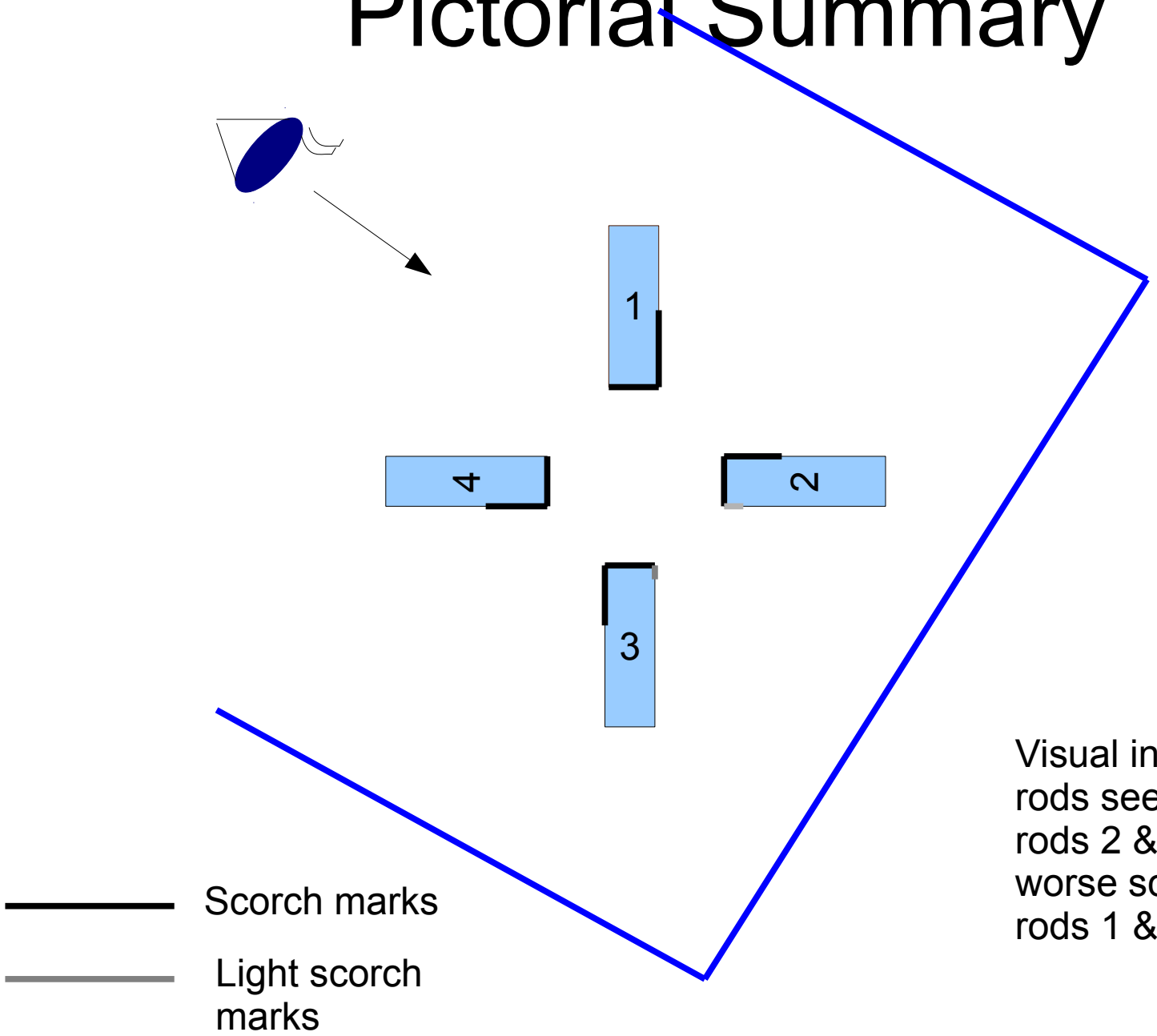

Visual inspection of the rods seem to show that rods 2 & 3 exhibit much worse scorching than rods 1 & 4.

Discolouration of the Tuning Plates

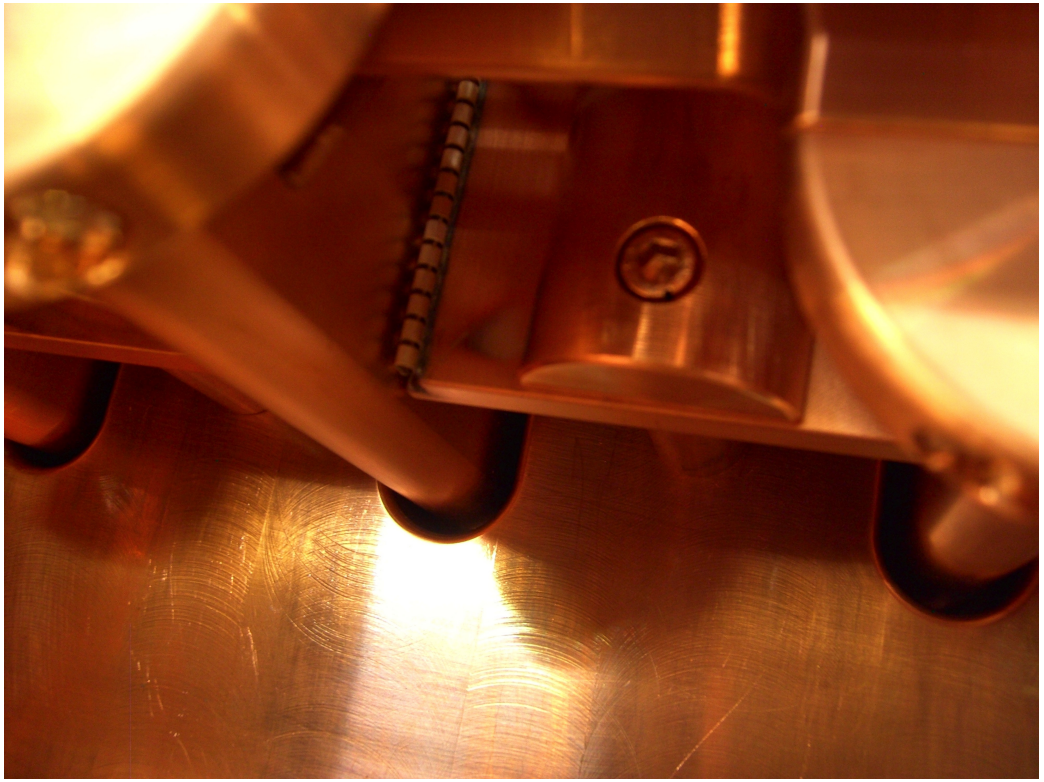

Silver discolouration of the tuning plates and some dark marks on edges of the silver region.

Crack in solder joint

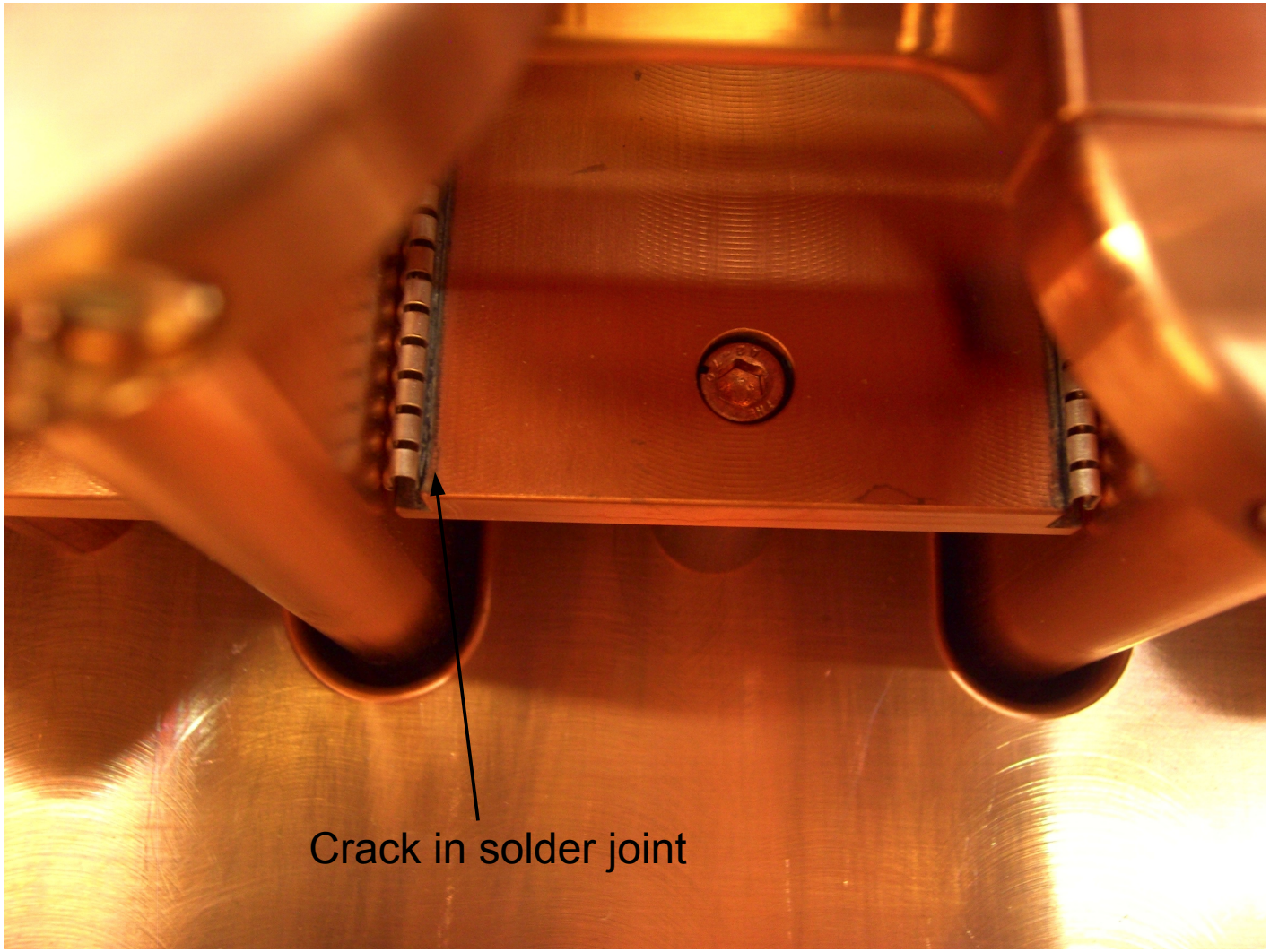

Manufacturing defect or localised RF heating caused this.

Test area, test stand and instrumentation

Device	Status	Comments
emittance probes		Check to see if horz and vert probes
can	swapped arms	give the same results
wires	waiting to be surveyed	Needs fiducials.

Dipole Magnet for Spectrometer

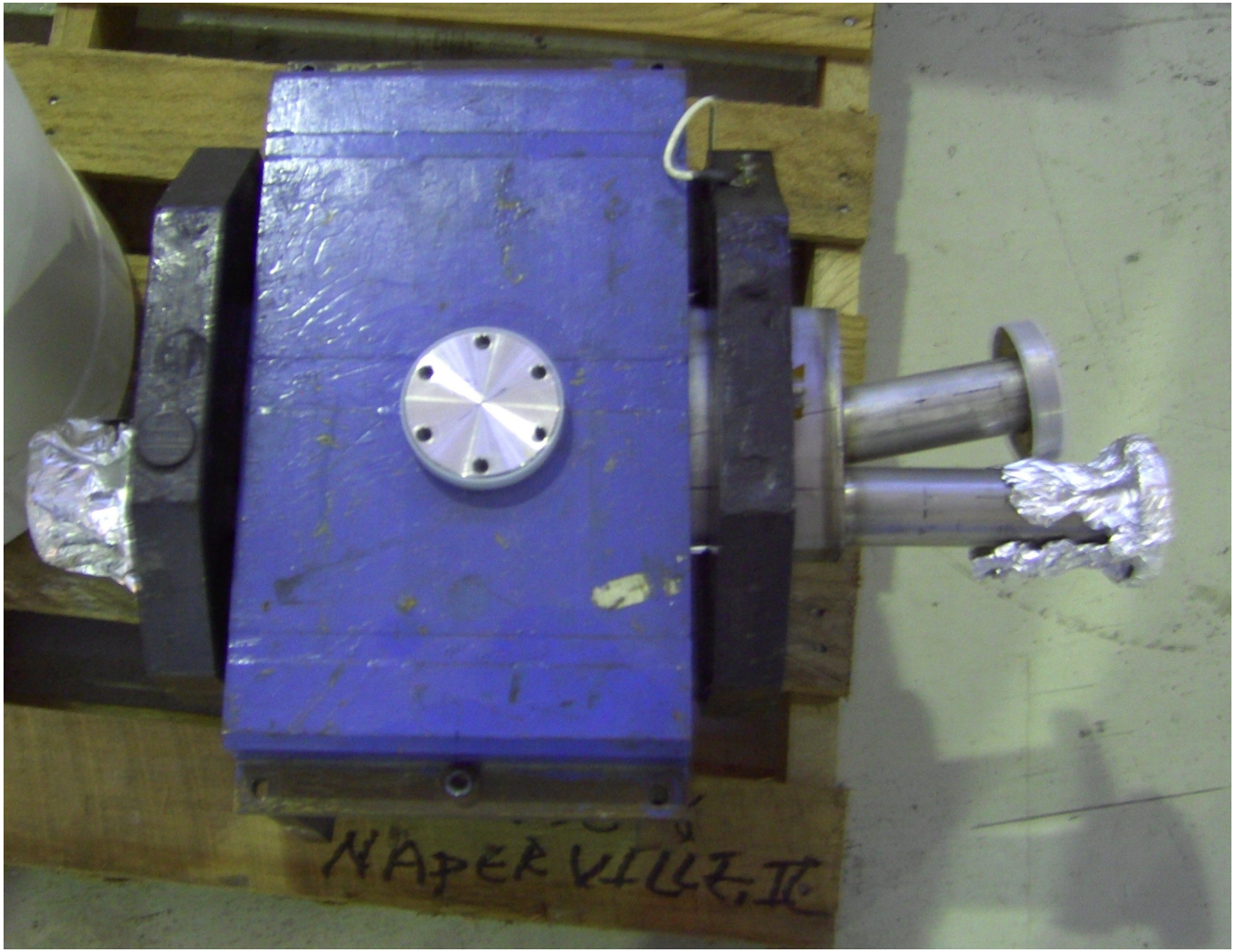

Controls

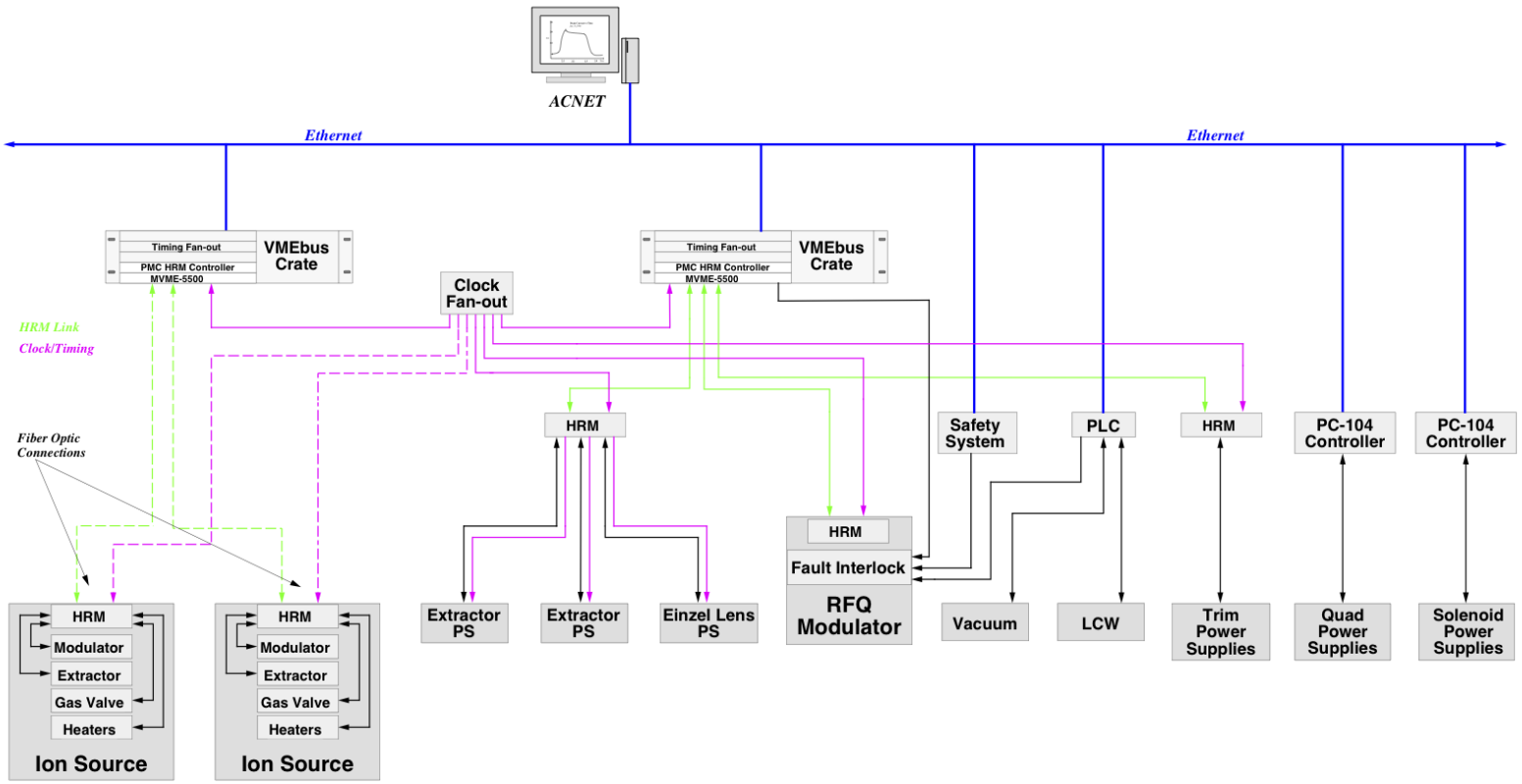

Linac RFQ Upgrade Controls Block Diagram

Controls

-

Safety