REV	DESCRIPTION	DRAWN	DATE
		APPROVED	DATE

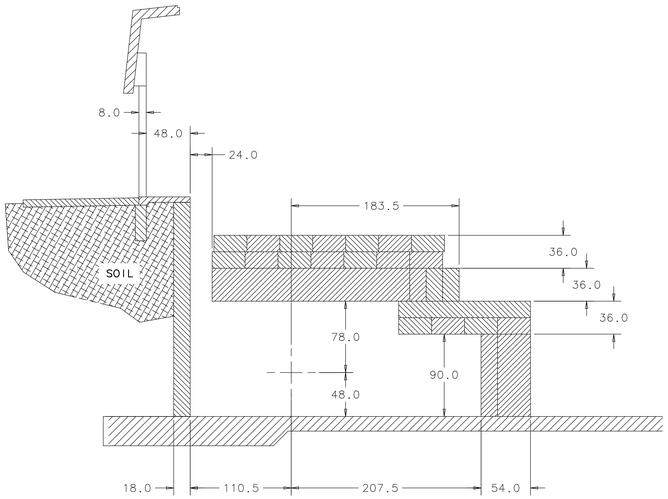

SECTION A-A

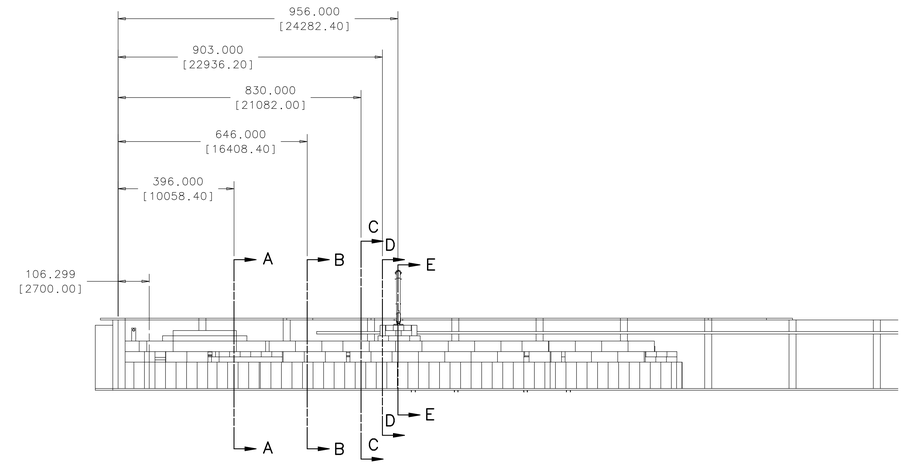

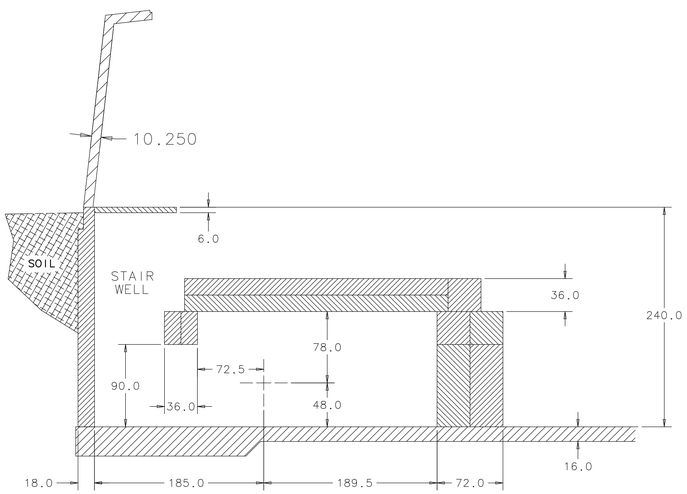

SECTION B-B

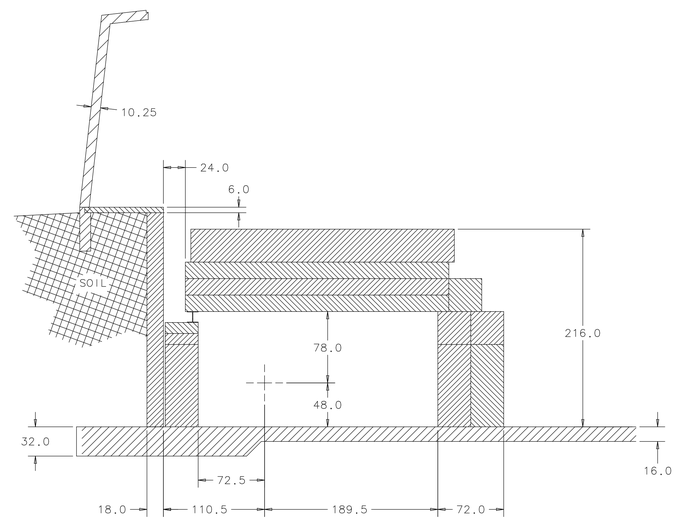

SECTION D-D

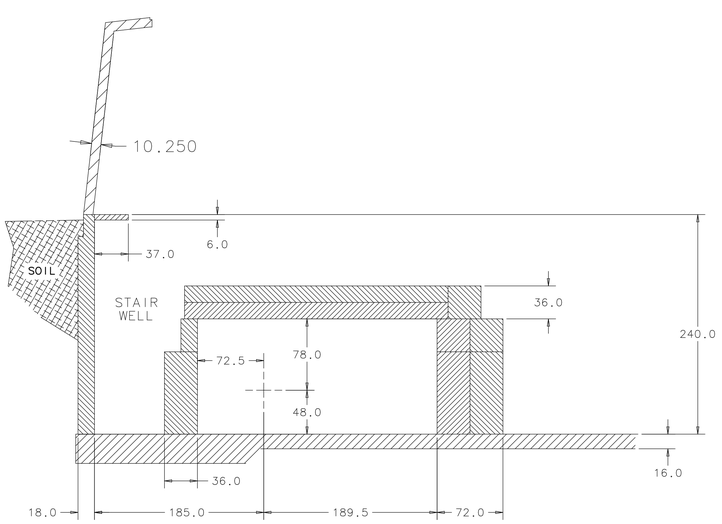

SECTION C-C

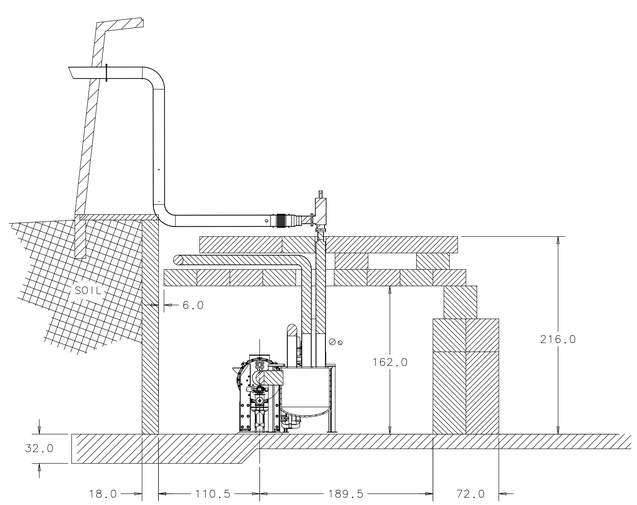

SECTION E-E

26MAR2013

UNLESS OTHERWISE SPECIFIED	ORIGINATOR		
	DRAWN		
± ± ±	CHECKED		
1. BREAK ALL SHARP EDGES MAX.	APPROVED		
2. DO NOT SCALE DRAWING. 3. DIMENSIONS BASED UPON	USED ON		
4. MAX. ALL MACH. SURFACES	MATERIAL		
5. DRAWING UNITS:			

FERMI NATIONAL ACCELERATOR LABORATORY
UNITED STATES DEPARTMENT OF ENERGY

SCALE	DRAWING NUMBER	SHEET	REV
	. — —	1 OF 1	

CREATED WITH : GROUP: