ANALOG DAMPERS IN THE FERMILAB BOOSTER

D.A. Herrup, D. McGinnis, J. Steimel, R. Tomlin
Fermi National Accelerator Laboratory*
P.O. Box 500
Batavia, Illinois 60510

Abstract

With the increase in intensity of the Fermilab Booster accelerator to over 3x10^{12} p's/pulse, active dampers have been required to control several transverse and longitudinal instabilities. The damper systems currently in use are: one narrow-band horizontal damper for the (+-Q_h) mode, a wideband horizontal damper for all modes, and four channels of narrow-band longitudinal dampers for coupled bunch modes 1, 48, 49, and 50. We discuss the observations that indicated that damper systems were necessary, the designs and operations of the systems, and their effects on beam quality in the Booster.

INTRODUCTION

The Fermilab Booster Accelerator is the lowest energy synchrotron in the Fermilab complex. The injected beam consists of (400 MeV protons provided by the Linac, and the 8 GeV extracted beam is injected into the Main Ring. The desired quality of the extracted beam is determined by the apertures of the Main Ring. In order to extract 3x10^{12} p's/pulse from the Main Ring, the Booster transverse emittances must be less than 17 π mm-mr and $\Delta p/p$ must be less thaV 1.5x10^{-3}.

At Booster intensities of 3x10^{12} p's/pulse (much below the 4x10^{12} p's/pulse needed to extract 3x10^{12} p's/pulse from the Main Ring) we observed coherent instabilities in the Booster which severely degraded the quality of the beam injected into the Main Ring. The horizontal emittance often exceeded 35 π mm-mr, and the longitudinal coupled bunch oscillations led to beam loss due to the restricted momentum aperture of the Main Ring. We undertook an effort to identify the unstable modes and provide active damping to counteract them.[1] Partly as a result of this program, the Booster has run with intensities of over 4.0x10^{12} p's/pulse with emittances acceptable to the Main Ring.

We have installed three different types of damper systems: a narrow band horizontal damper acting upon the (+-Q_h) mode, a wideband horizontal damper, and longitudinal narrow band dampers acting on non speci®c coupled bunch modes. We will describe the measurements indicating the existence of the unstable modes and the designs of the damper systems.

UNSTABLE MODES AND DAMPERS

Horizontal Modes

The ®rst horizontal mode identi®ed was a mode which appeared during the last half of the Booster accelerating cycle at a frequency of approximately 180 KHz, corresponding to the lowest horizontal sideband. The horizontal tune is normally 6.7, the revolution frequency during the second half of the cycle 626 KHz, so the unstable mode is (7-Q_h). We believe that this is a resistive wall mode which is strongly driven at low frequencies. This instability is very strong and dominates the horizontal spectrum.

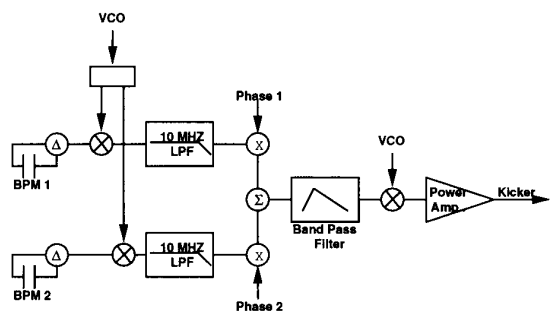

Figure 1. Schematic diagram of the horizontal narrow band damper system.

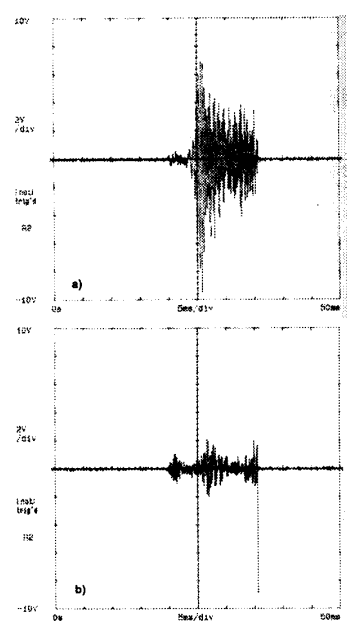

Figure 2. Signal on a horizontal BPM before (a) and after (b) installation of the horizontal narrowband amper.

Fig. 1 is a diagram of the damper system used to reduce this oscillation. The beam oscillations are detected using the difference signals on two BPMs 104° apart in betatron phase. After mixing to baseband with the Booster VCO and ®ltering, the proper phase is established using the two time-dependent ramps

*Operated by the Universities Research Association under contract with the U. S. Department of Energy

which multiply the processed BPM signals. The signals are then summed, put through a bandpass ®lter centered at 120 KHz to reject the synchrotron frequency on the low frequency side and the (Q_h-6) line at approximately 450 KHz on the high frequency side, mixed back up to 53 MHz, and then put into a power ampli®er and sent to the kickers. The overall system gain is roughly 112 db.

Figs. 2a and 2b are plots of the signal on a single BPM before (a) and after (b) installation of the damper system.

Once installed, this damper esiminated any signi®cant mode (+-Q_h) oscillation (Fig. 1b). However, the emittance was still larger than acceptable for the Main Ring. Examination of the frequency spectrum of a BPM showed that although the mode (+-Q_h) frequency was completely absent, oscillations developed at the other mode frequencies, indicating the need for a wideband damper. The system we installed (Fig. 3) uses the difference signal for a BPM. After being mixed down to baseband, ®ltered, and delayed, the output signal is summed with the signal from the narrow band damper and applied to the same kicker. The phase response of this damper is ¯at over the frequency range 0-26 MHz and the gain ranges from 20 db at low frequencies to about 7 db at 26 MHz. It has not been necessary to install equalizers. With the installation of this damper system, horizontal instabilities do not appear at intensities of 4.0x10^{12}.

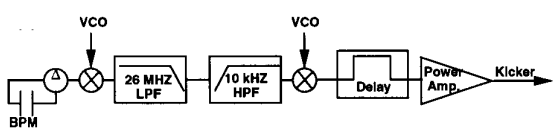

Figure 3. Schematic diagram of the horizonal wide band damper system.

Longitudinal Modes

Longitudinal coupled bunch modes have long been known to exist in the Booster. Several attempts to control them have been made, the most recent being the installation of passive dampers ¯aps in the RF cavities to remove the energy of the driving modes. [2] This modi®cation eliminated instabilities up to an intensity of about 2.5x10^{12} p's/pulse, but above this intensity the coupled bunch modes 1, 48, 49, and 50 appeared. Narrowband active damper systems, each acting on a different revolution harmonic, were designed to damp these modes. Fig. 4 is a diagram of the basic damper. It is designed around a single sideband mixer whose inputs are the the time derivative of the phase and a direct digital synthesizer operating at a different revolution harmonic for each damper channel. The processed signal is then input into the RF system and applied to the beam through the RF cavities. The gains of the systems vary by mode, but are at least 80 db. These systems have been effective in reducing the coupled bunch oscillations to a tolerable level. Fig. 5 is a plot of the error signal at the phase detector for the 4 systems installed with and without the damper system turned on. With these dampers operating longitudinal stability is ensured at intensities of 4x10^{12} p's/pulse the extracted $\Delta p/p$ has been as low as 0.001.

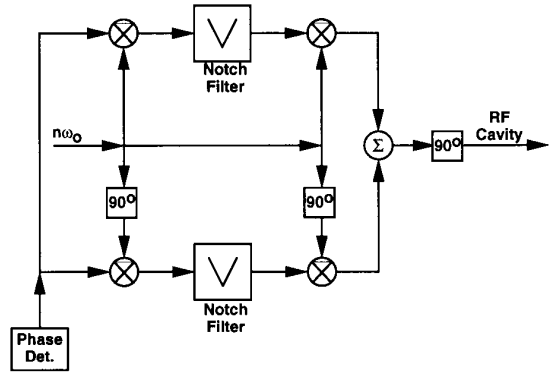

Figure 4. Schematic diagram of the longitudinal narrow band damper system.

CONCLUSIONS

Elimination of transverse and longitudinal instabilities has allowed the Booster to produce extracted intensities of 4x10^{12} p's/pulse with low emittances. We look forward to increasing the intensities and dealing with the next set of instabilities.

References

[1] For a summary of earlier work on active dampers in the Fermilab Booster, see J. Steimel Jr. and D. McGinnis, Proceedings of the 1993 Particle Accelerator Conference, p. 2100.

[2] K. Harkay, A Study of Longitudinal Instabilities and Emittance Growth in the Fermilab Booster Synchrotron, Ph.D Thesis, Purdue University, 1993.

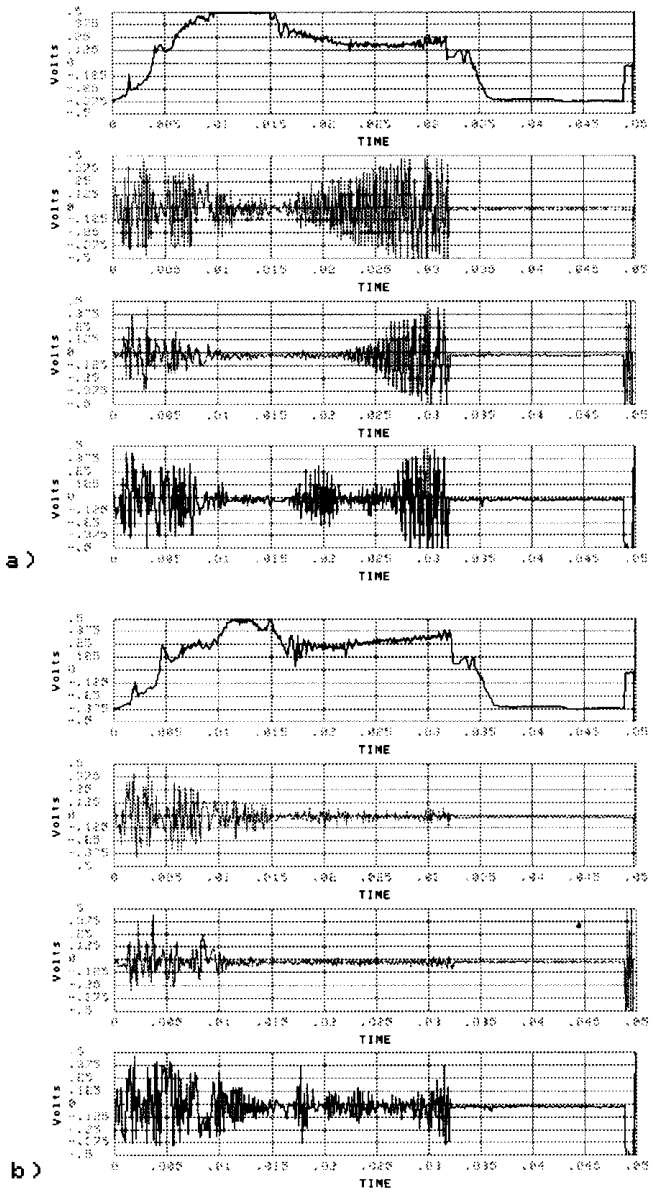

Figure 5. Error signals for the longitudinal dampers with dampers off (a) and on (b). From top to bottom, the modes are 1, 48, 49, and 50.