LINAC LASER NOTCHER READINESS REVIEW

August 5th, 2014

Kevin Duel – Mechanical Support Engineer

Outline

- MEBT Modification and Installation

Remove quads, corrector and beam pipe

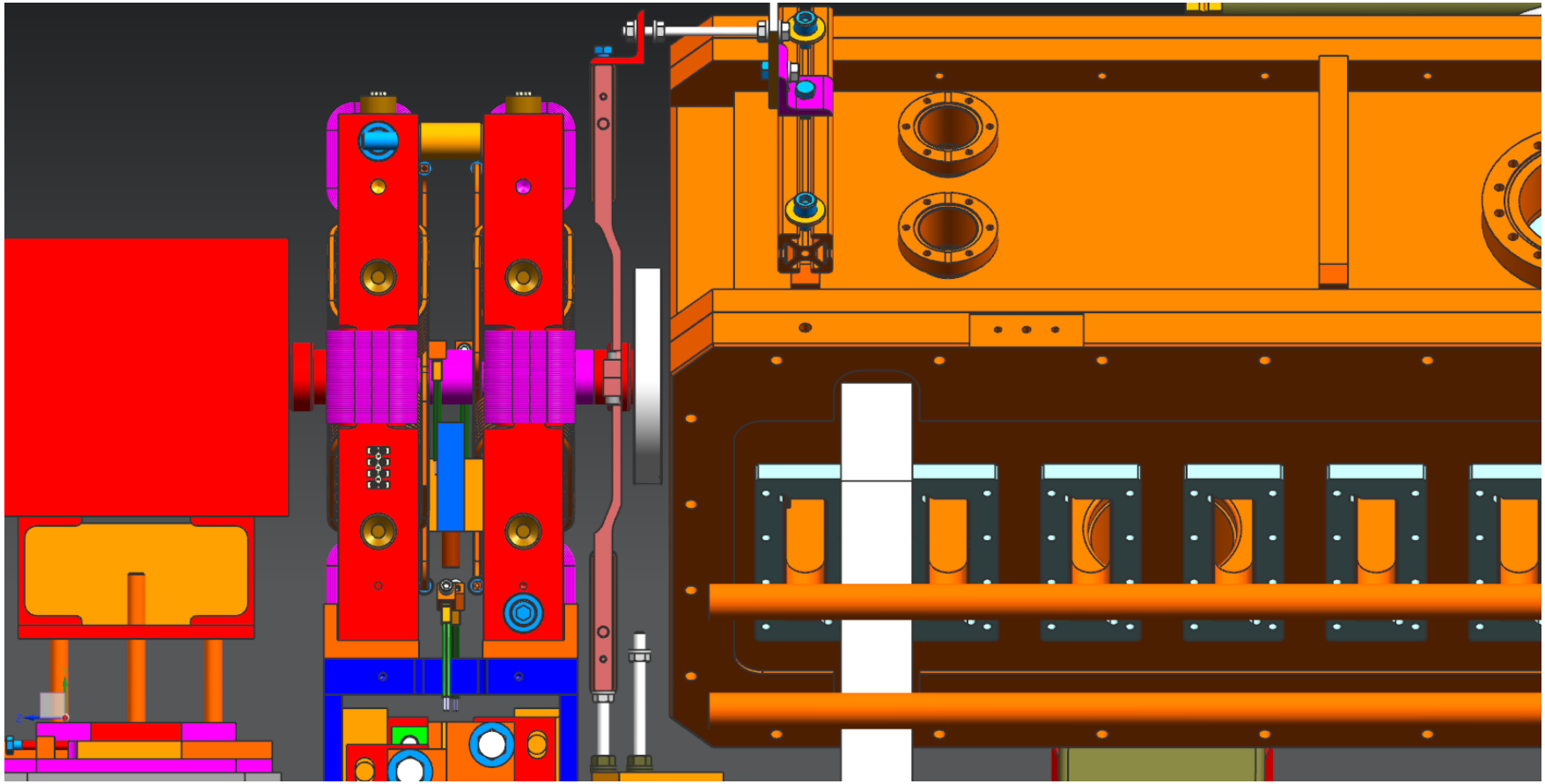

Quads, corrector, and beam pipe removed

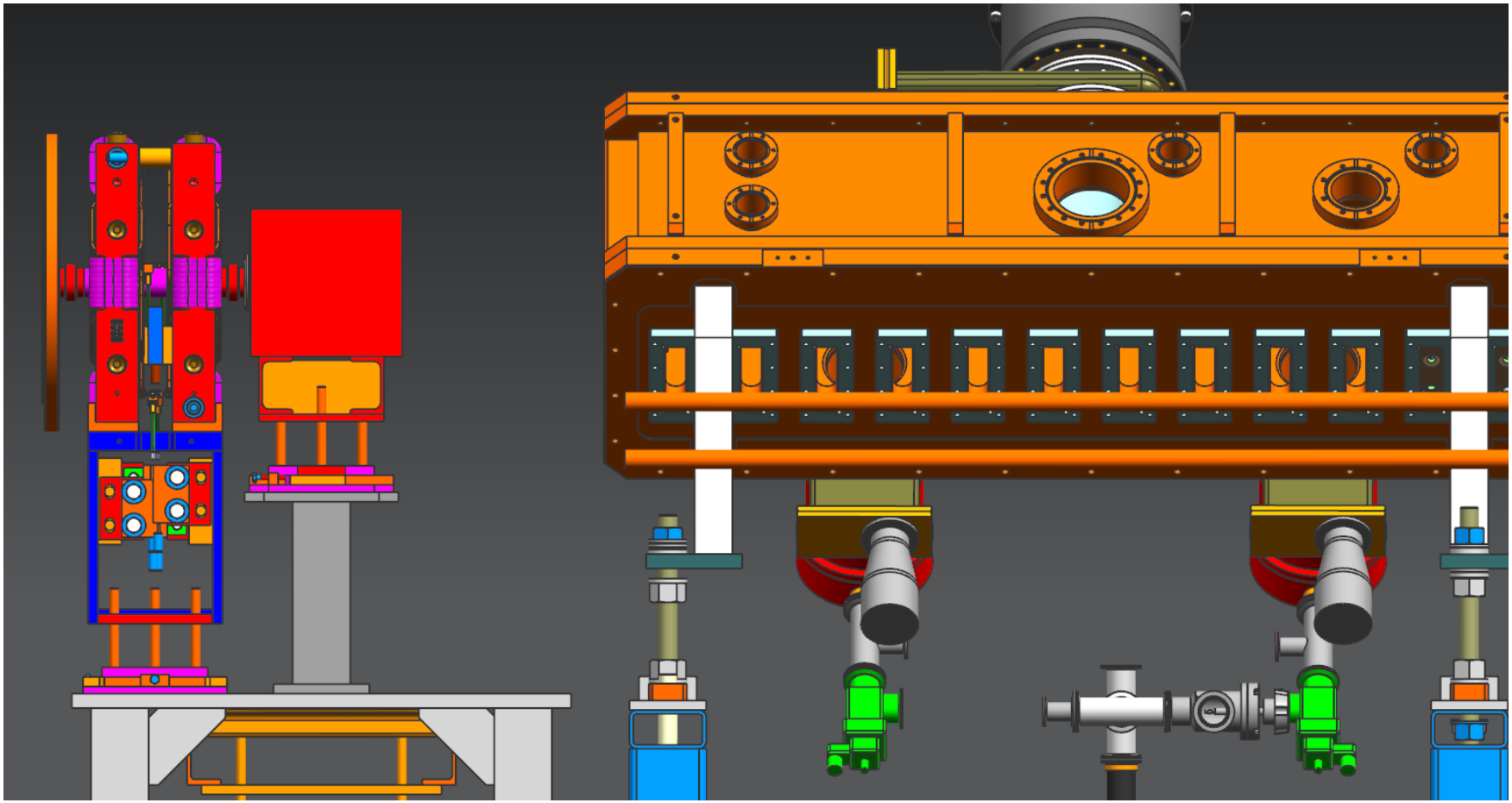

Swap out adjuster stand plates

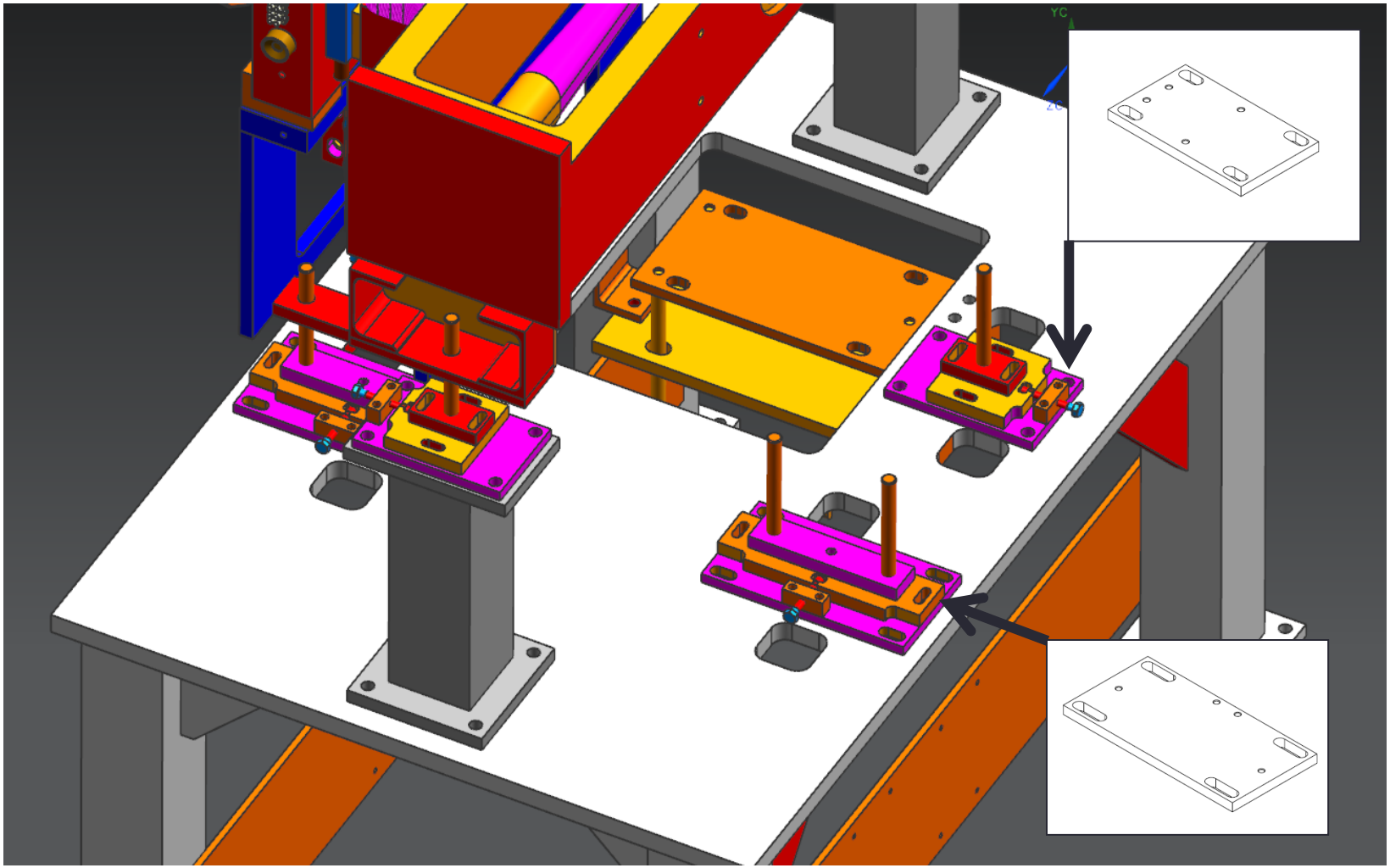

Cut off 6” Conflat and bellows and cut beam pipe to final length in machine shop

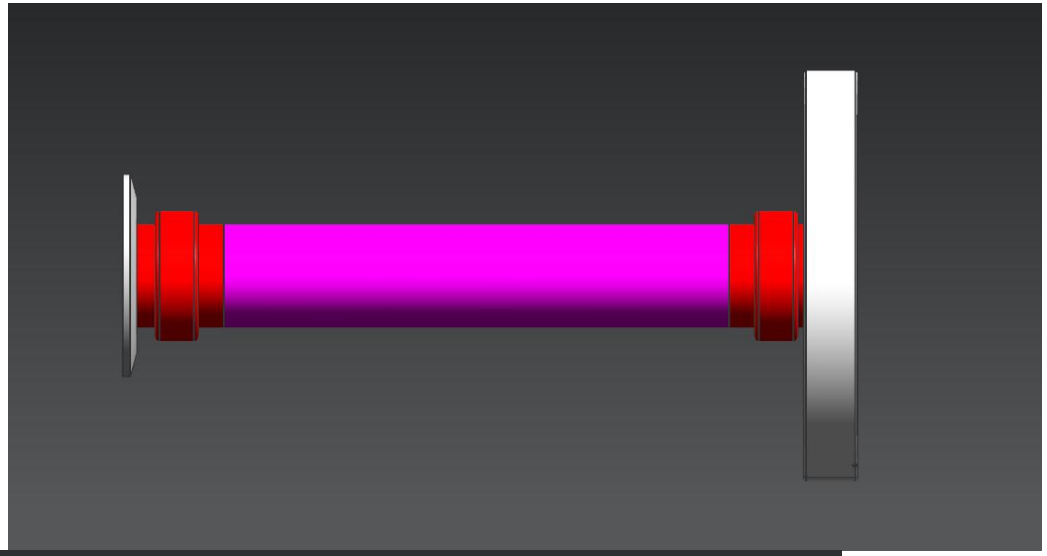

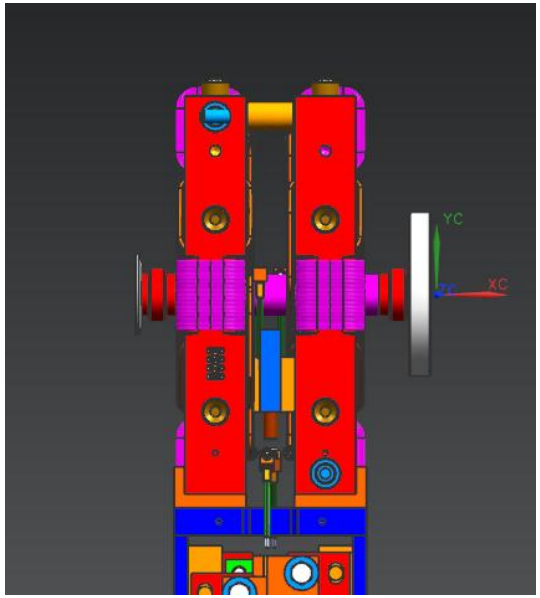

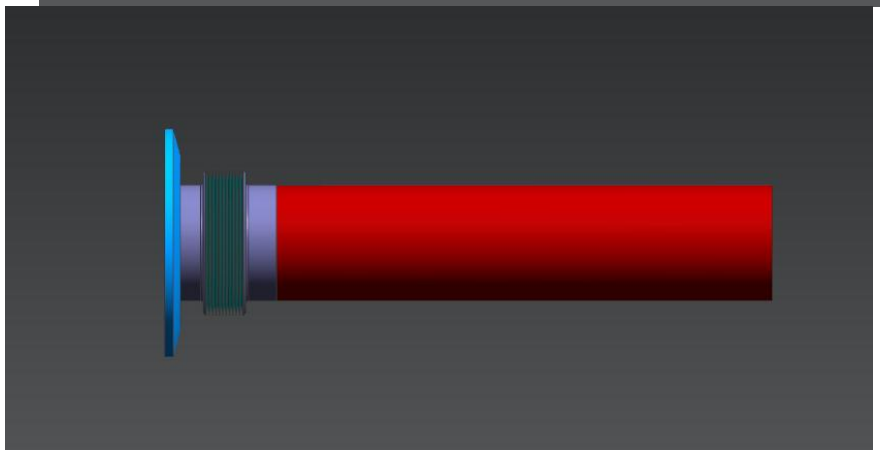

Clean beam pipe after machining

Insert beam pipe through quad and weld on new bellows and KF50 flange

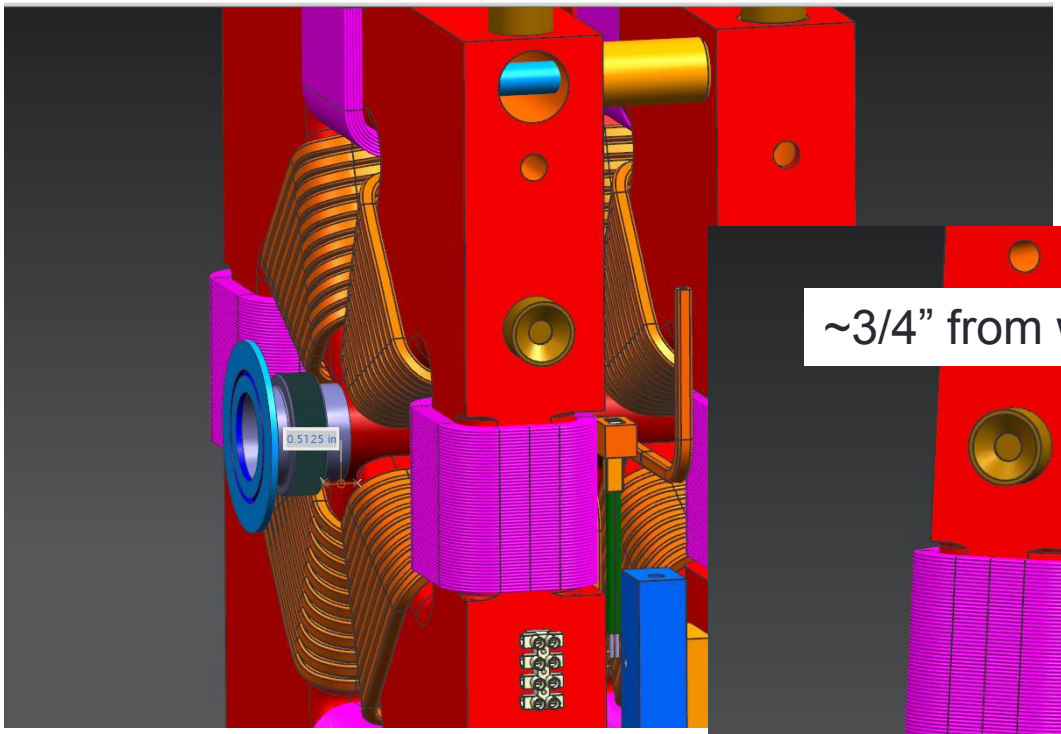

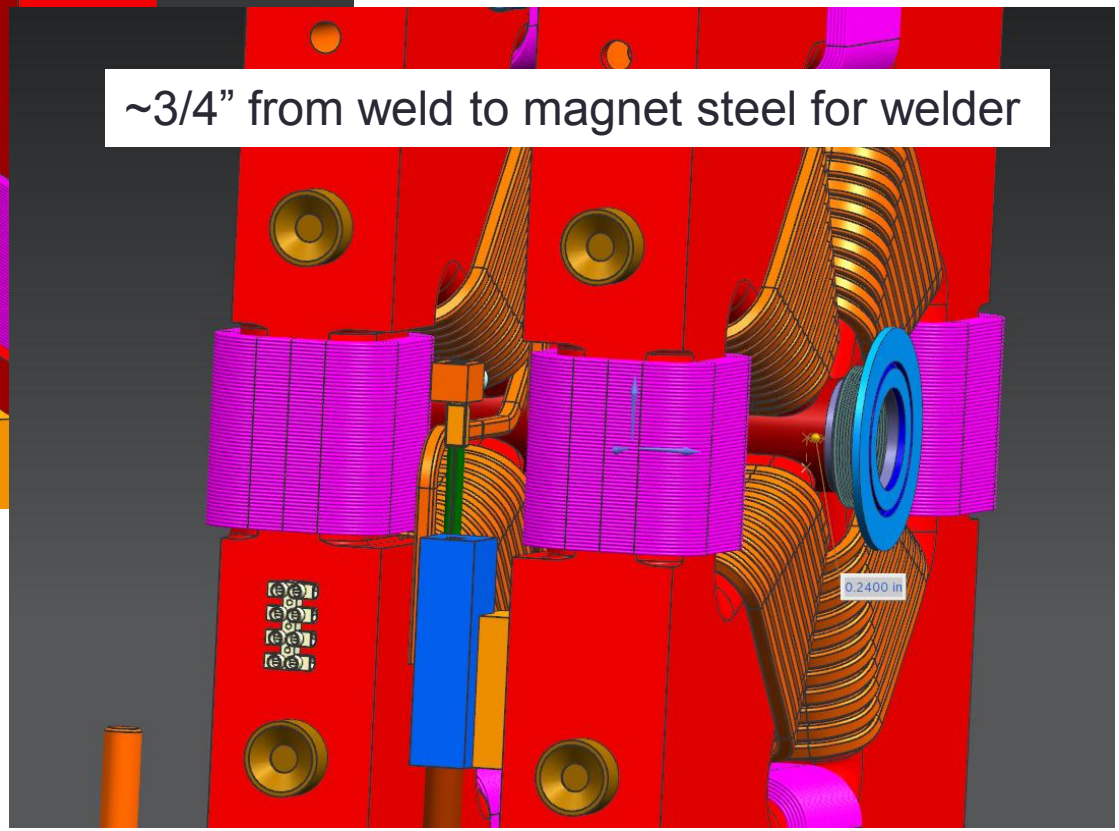

Insert beam pipe through quad and weld on new bellows and KF50 flange

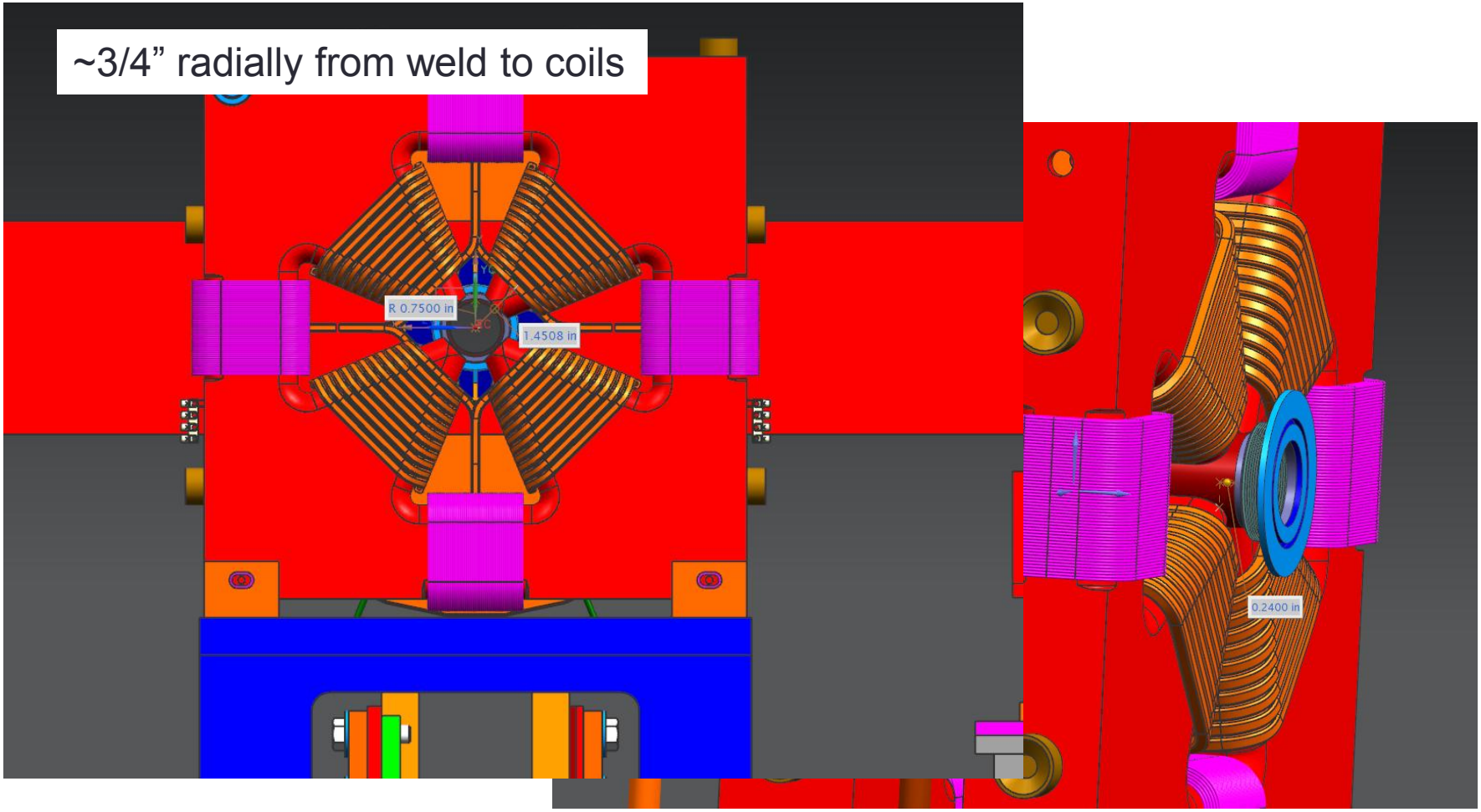

Assemble VC/OC onto RFQ, blank off KF50 port and leak check

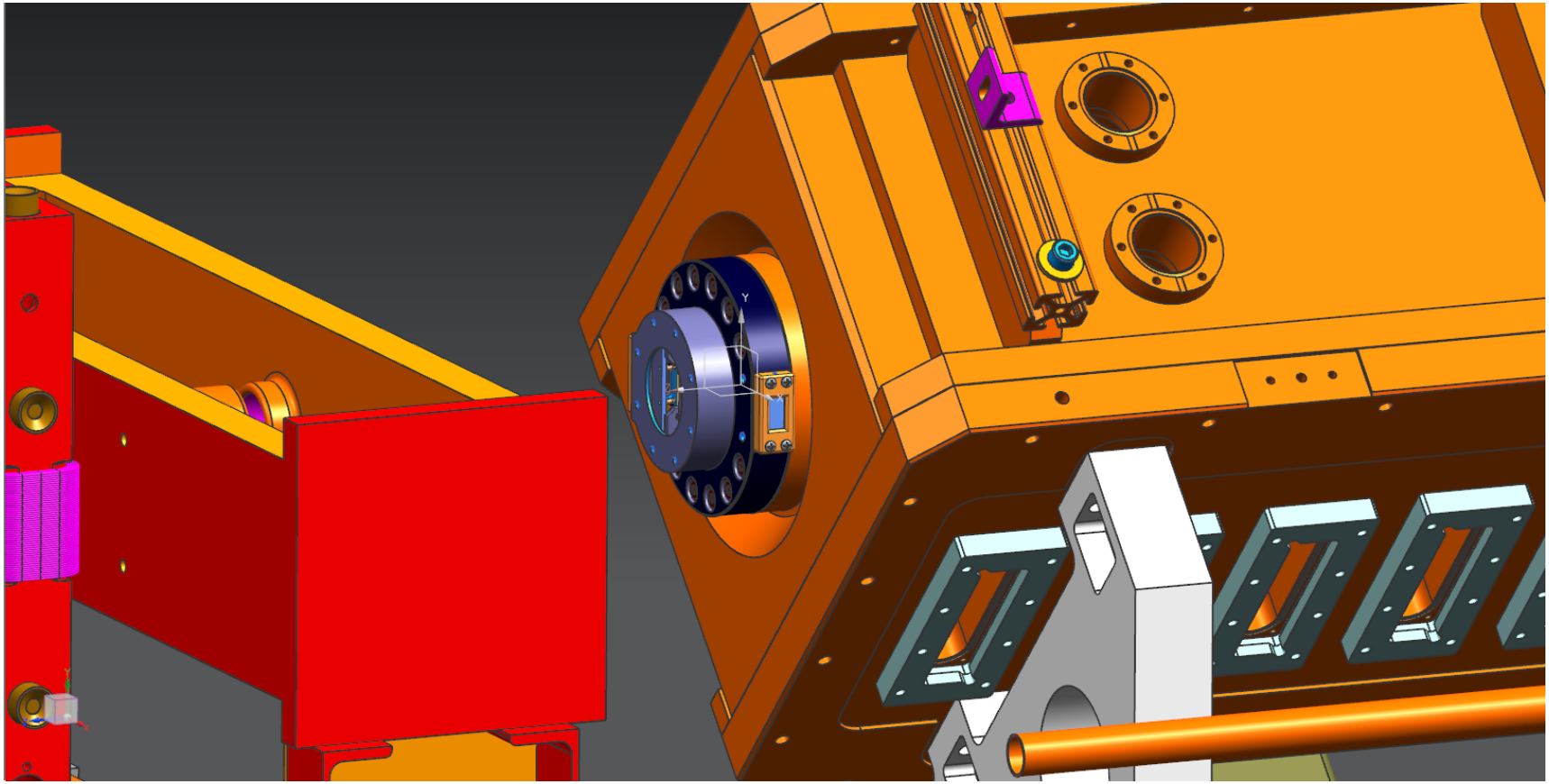

Install quads with new beam pipe, and make up KF50 flanges

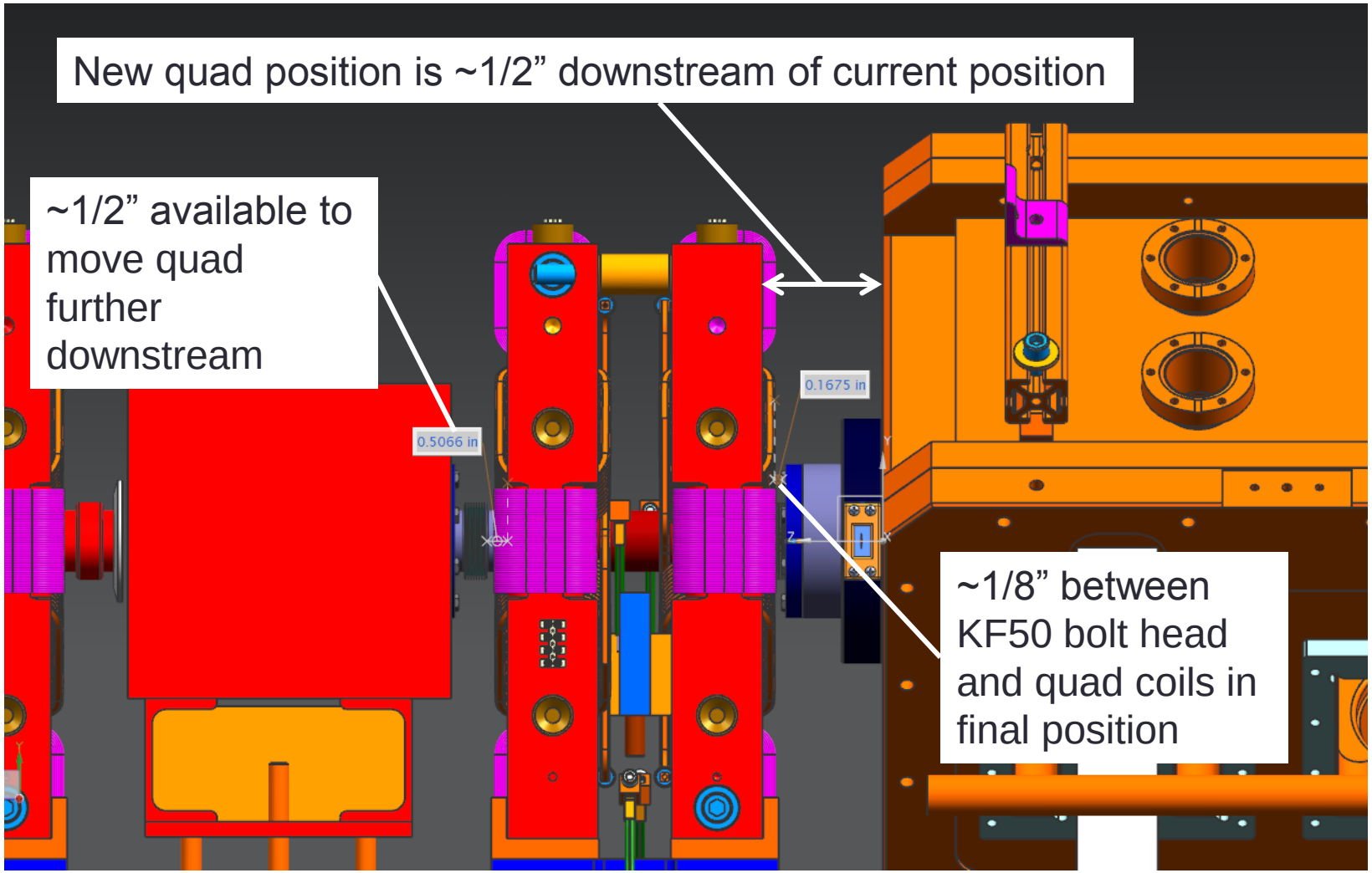

Install quads with new beam pipe, and make up KF50 flanges

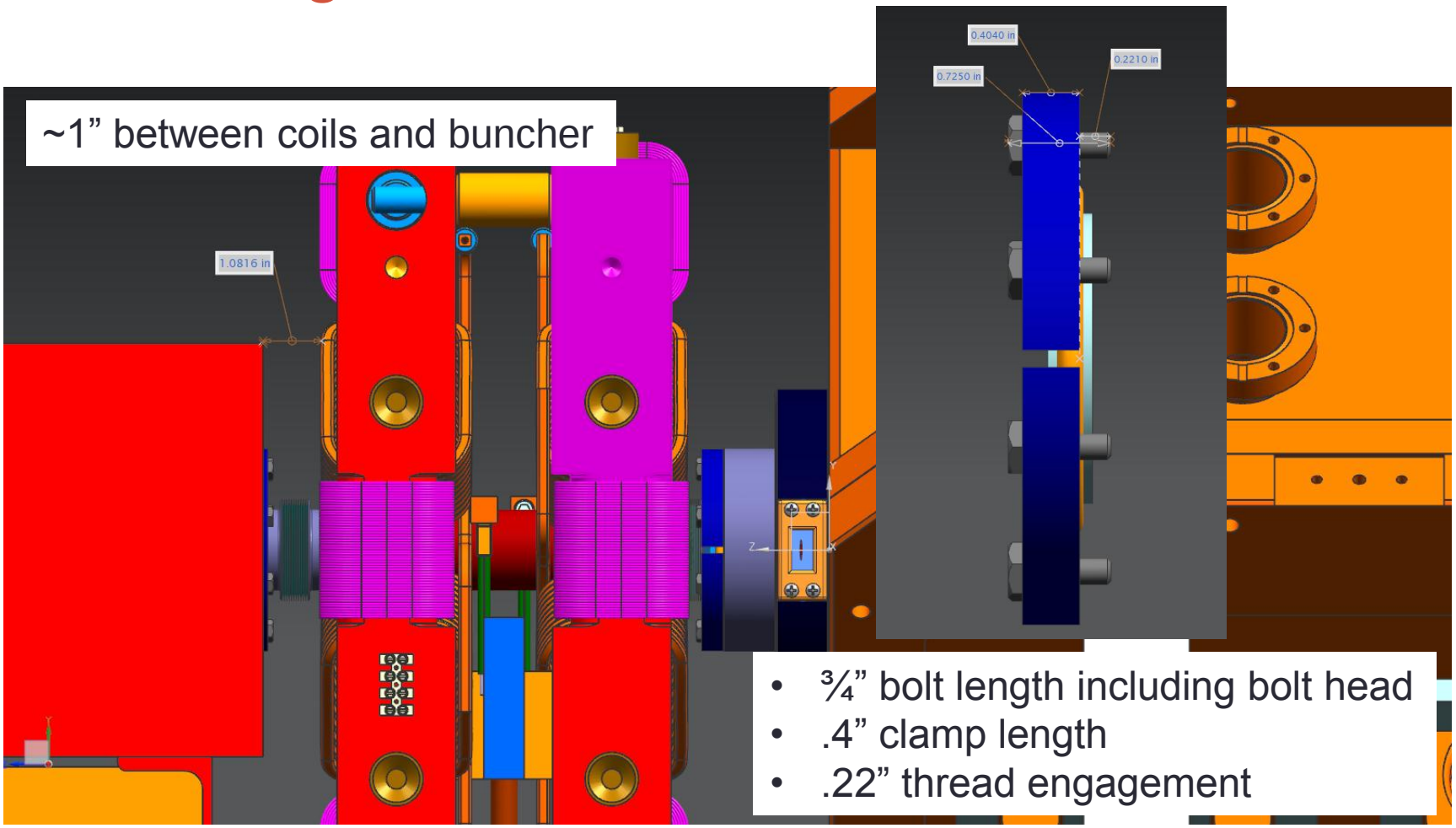

- ¾” bolt length including bolt head
- .4” clamp length
- .22” thread engagement

Remaining work

- Leak check
- Alignment