Coupler Model with lumped circuits

C.Y. Tan
21 Oct 2014

Using Gennady's latest model as the transmission line model

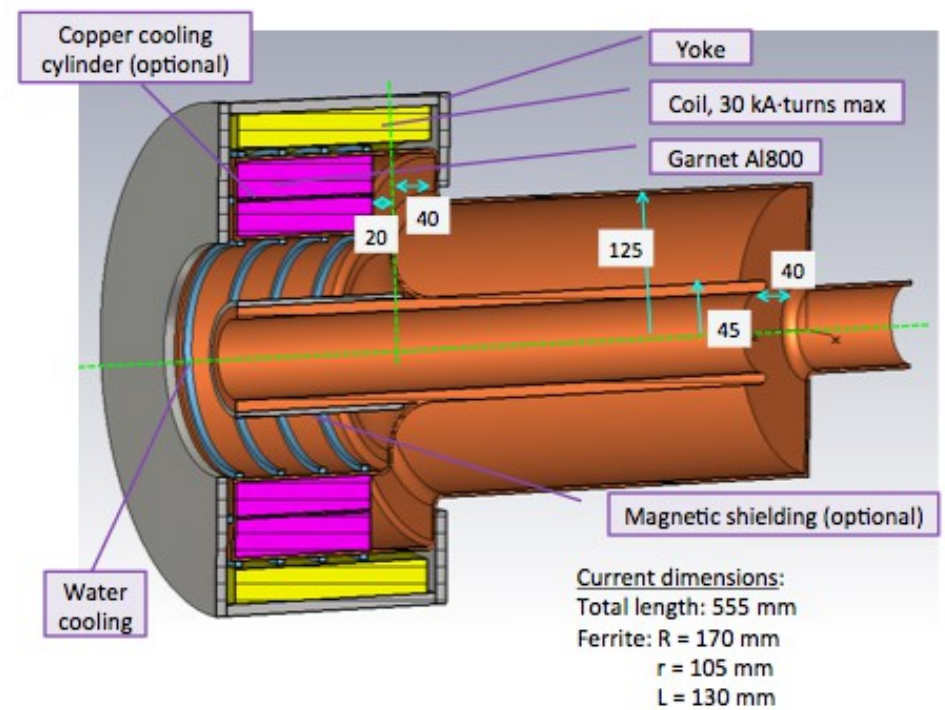

R_g = 160 kΩ is SSC number for their cavity. Will need to changed when we know what it really is from CST simulations.

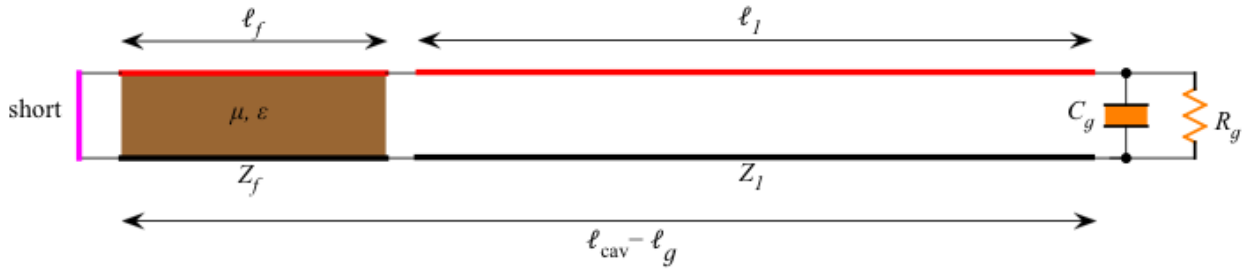

Goals

- How do I connect the coupler to the cavity and still keep it resonant?
  - I must also “match” it to the cavity.
  - Use conjugate matching criterion $Z_L = Z_g^*$ where Z_L is the load impedance and Z_g is the source impedance.
  - It is clear for a perfect “match”, the reactive part cancels and only the real part remains in the circuit.
- Check MWS model and transmission line mode to see if they give approximately the same results.

How length of garnet is found

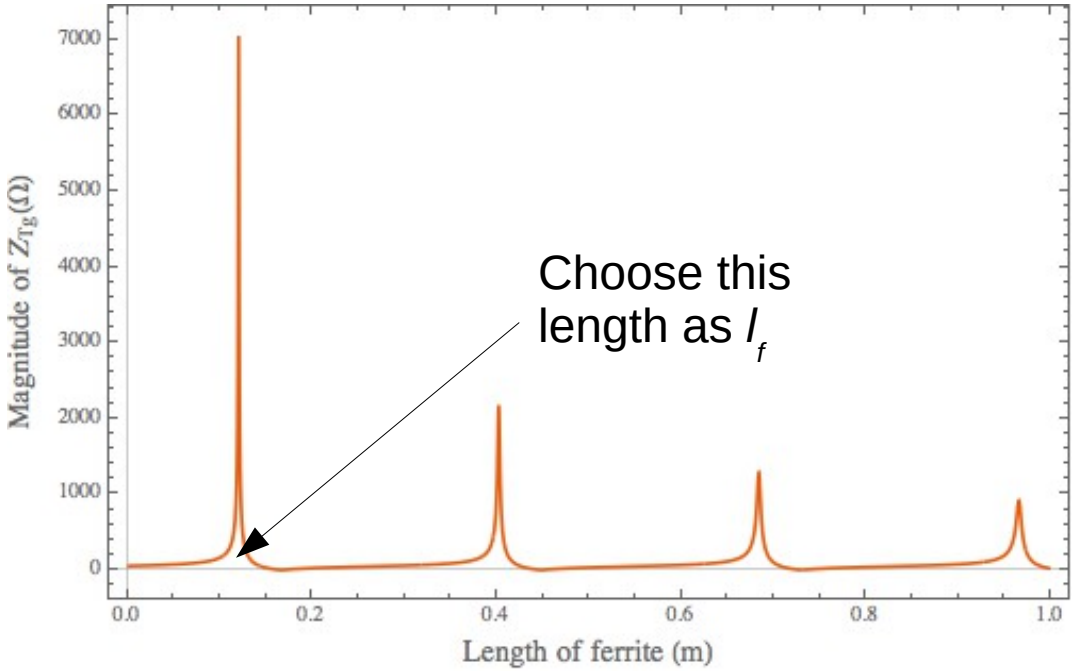

The length of the garnet is found by varying its length until a resonance is found.

The length of the non-garnet part is 38.5 cm.
The length of the garnet is l_f = 12.3 cm for the first resonance.
The gap is 4 cm.
Total length is 54.8 cm which is very close to Gennady's 55.5 cm.

Behaviour of voltage along cavity

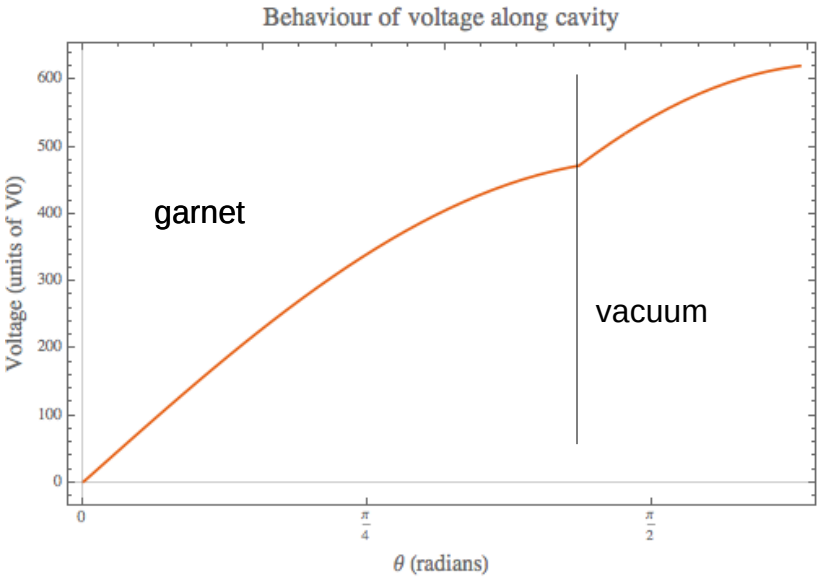

In terms of phase, the total length of the cavity is 114 degrees, i.e. it is neither a λ/4 or 3λ/4 cavity.

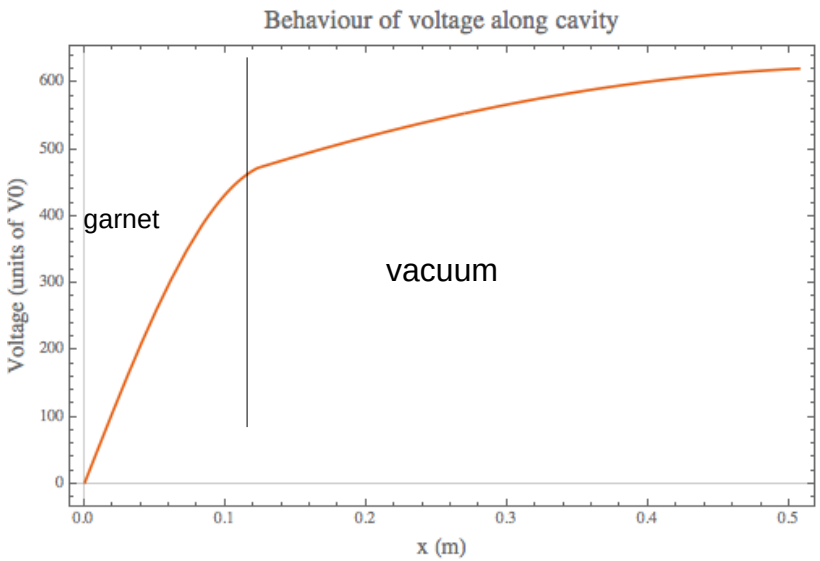

Total length of the cavity not including the gap is 50.8 cm.

With gap it is 54.8 cm.

The voltage step up is about 1.2 from the centre of non-garnet part to the gap.

Coupling point impedance ...

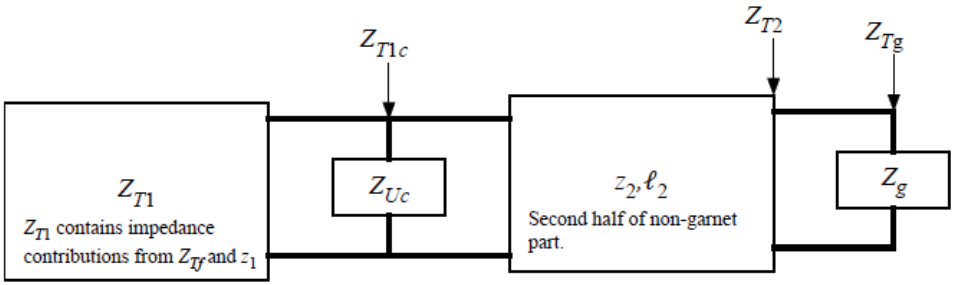

I can calculate the impedance Z_{T1c} (= Z_{TP} below) at the coupling point after I found the length of the garnet.

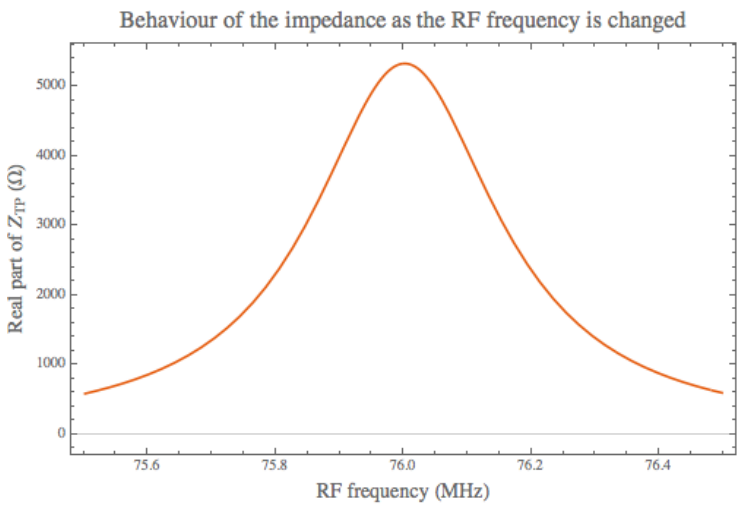

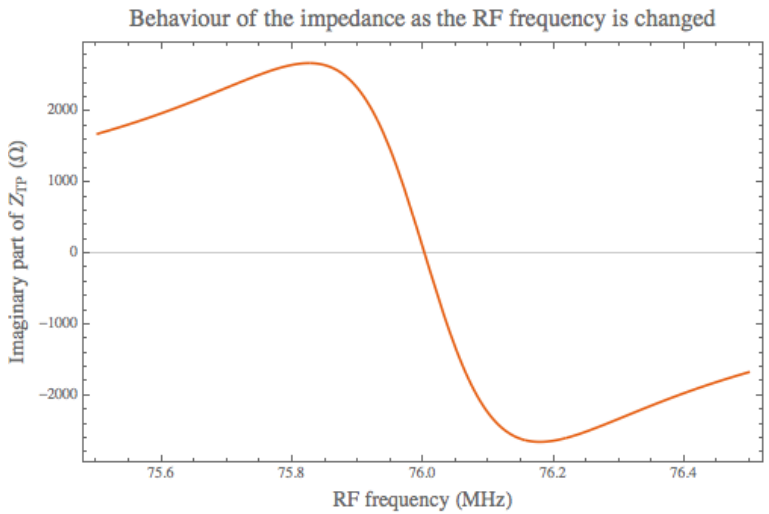

This shows the behaviour at the coupling point of the cavity as the frequency is changed. Since the cavity is in resonance, I would expect a large real part and a small imaginary part. This is exactly what I see.

$$Z_{TP} = 5333 + 67\,i$$

at 76 MHz in the middle of the non-garnet part. Of course, off resonance, the real part of the impedance falls.

Matching to cavity (lessons learnt)

- The connection between the coupler and cavity is very short

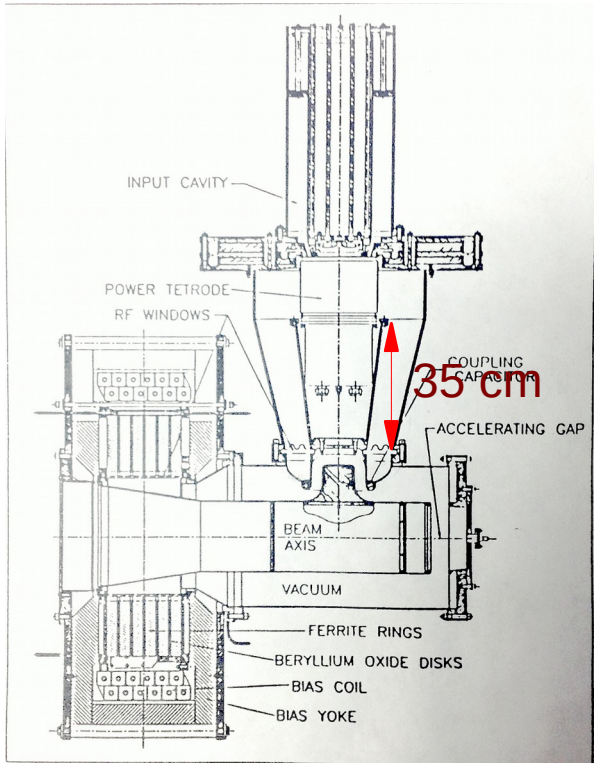

Wavelength at 76 MHz ~ 4 m, this means 35 cm connection < 10% of wavelength. Therefore, we can treat transmission line as a piece of “wire”!

Therefore, simple circuit model can be used for the coupler.

Tube+Coupler circuit model

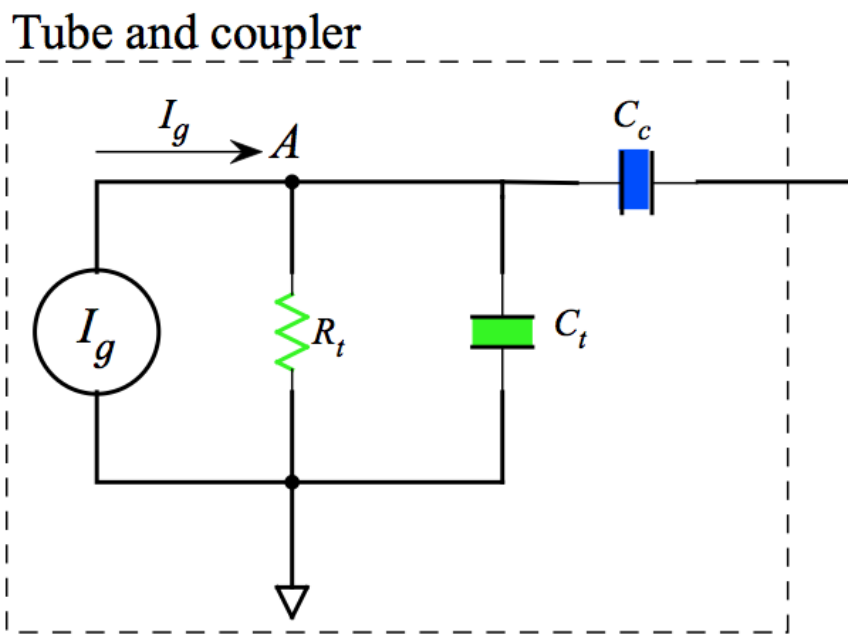

Hmmm, looks like we have a problem!

If C_t = 60 pF (old value 56 pF) then Z_t = 35Ω @ 76 MHz! Looks like a short!

Well, it is a problem if you are Homer Simpson!

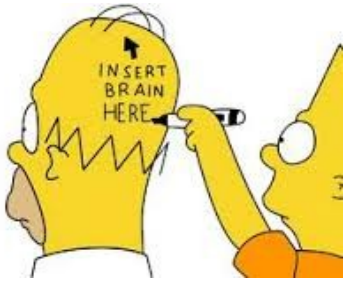

I forgot about the other elements in the cavity, ugghh!

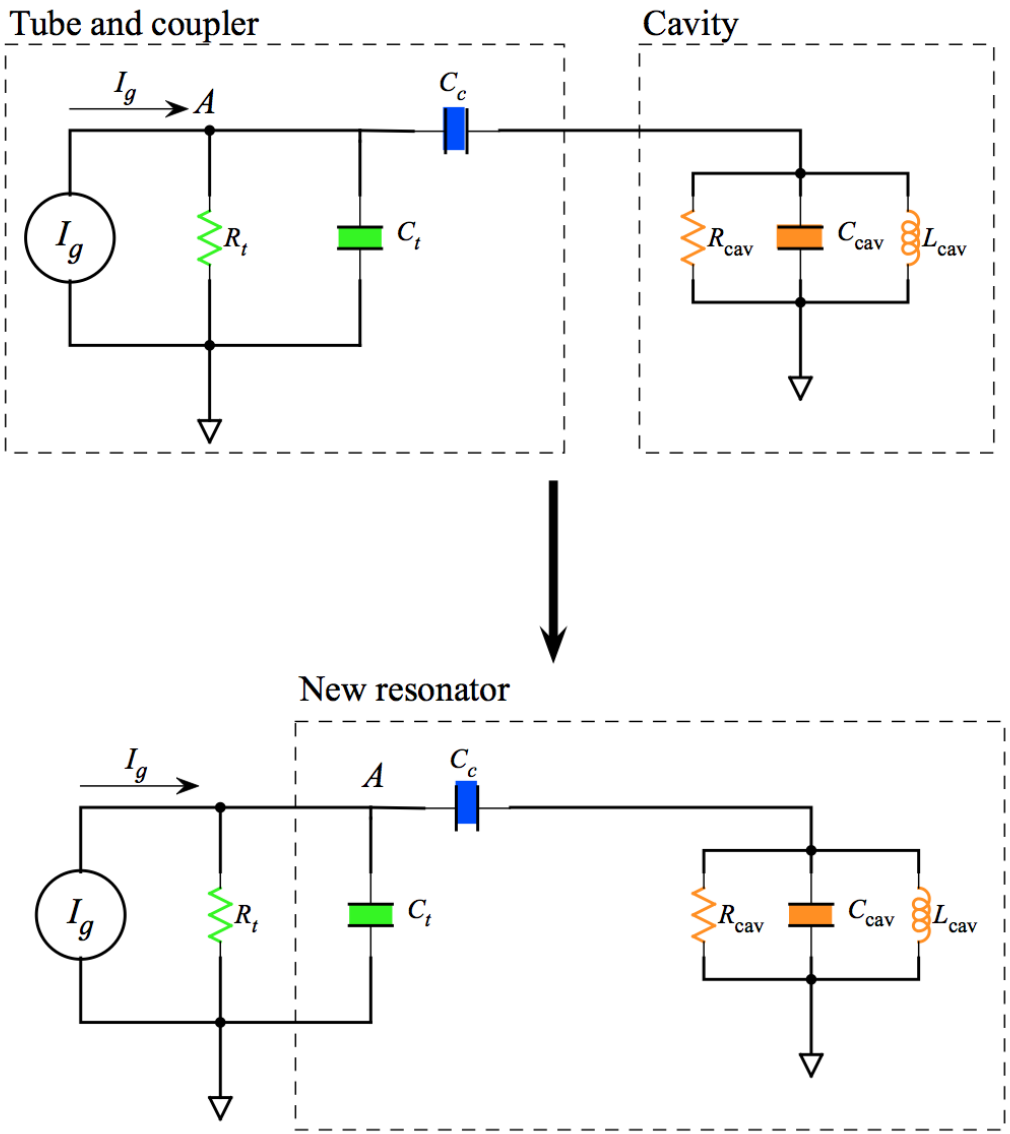

When we connect a coupler to the cavity, the capacitors in the tube and coupler equivalent circuit, and the coupling capacitor shifts the resonant frequency away from 76 MHz! Therefore, 76 MHz will short to ground, but the resonant frequency does not short.

Equivalent circuit

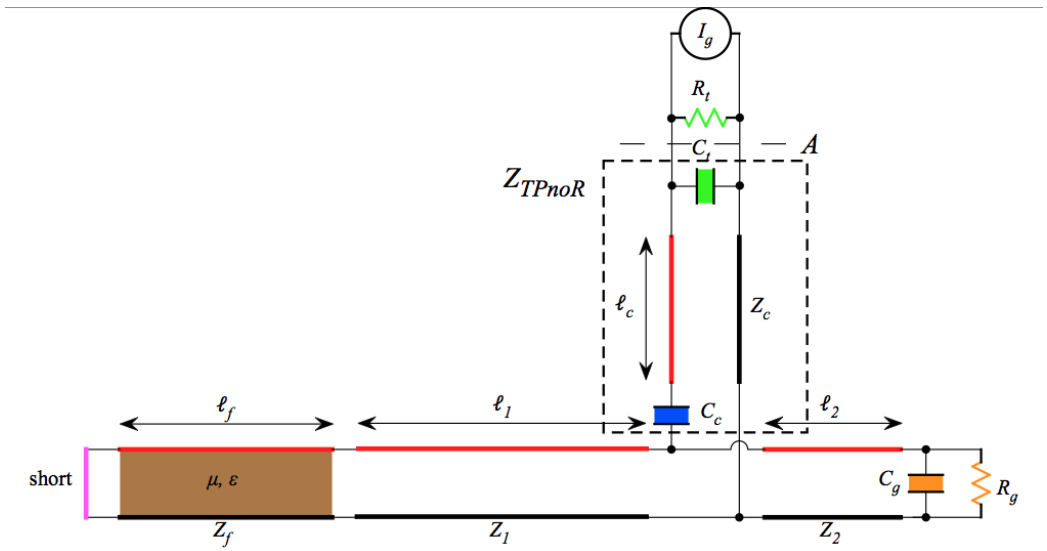

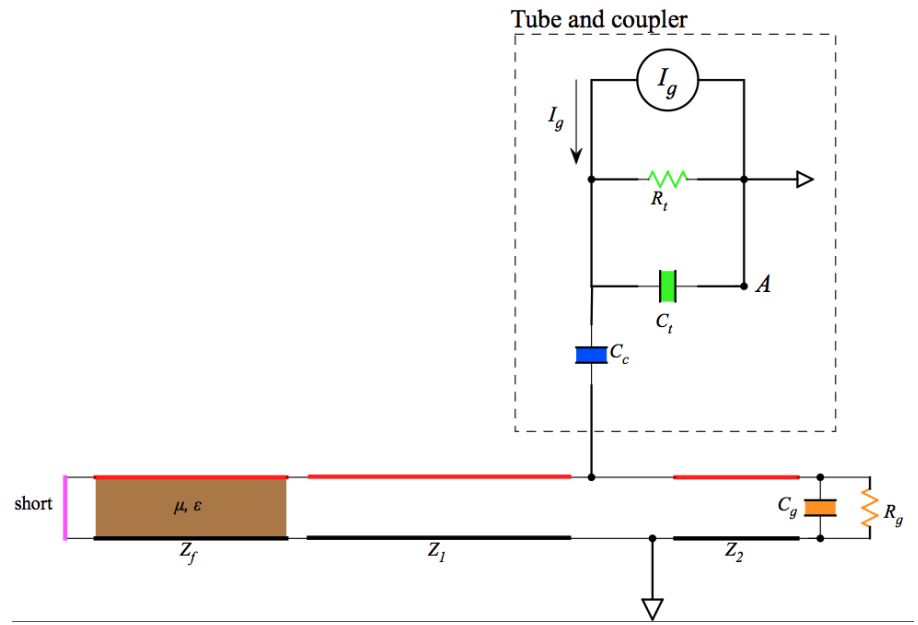

R_t = 1.3 kΩ (comes from analysis of 4CW100,000 data sheet. c.f. Joe Dey's measurement 1.4kΩ)

C_t = 60 pF (old value 56 pF)

C_c = 10 pF, C_g = 3.4 pF (Superfish calculation), R_g = 160 kΩ

Physical dimensions

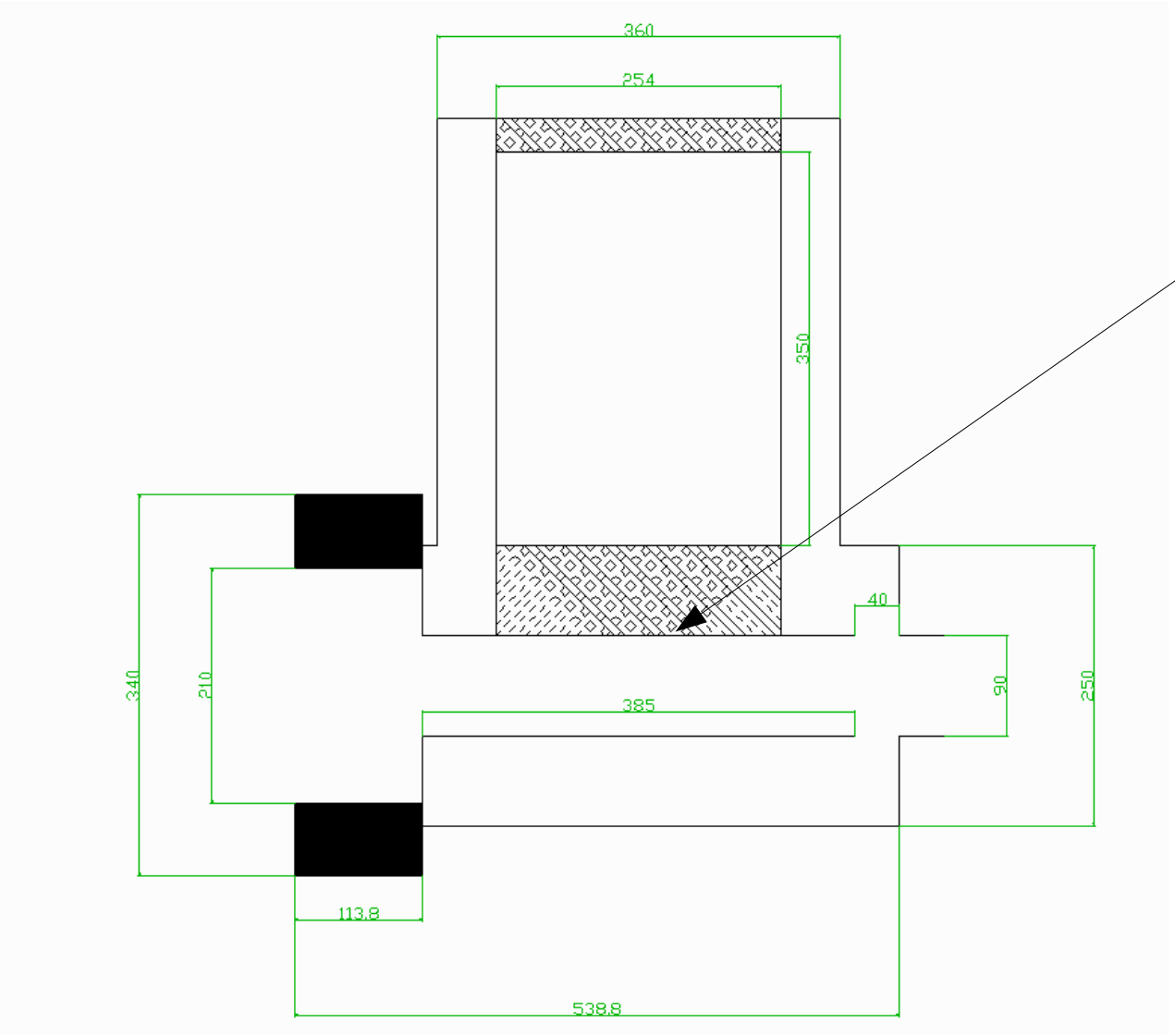

Note: the capacitor in the model is at point contact

All dimensions in mm

What happens to the resonance?

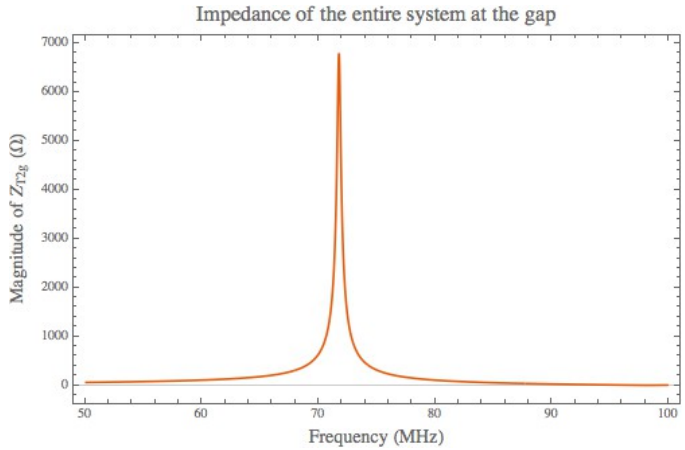

Frequency has shifted as expected when coupler is connected.
It is 71.8 MHz and not 76 MHz.

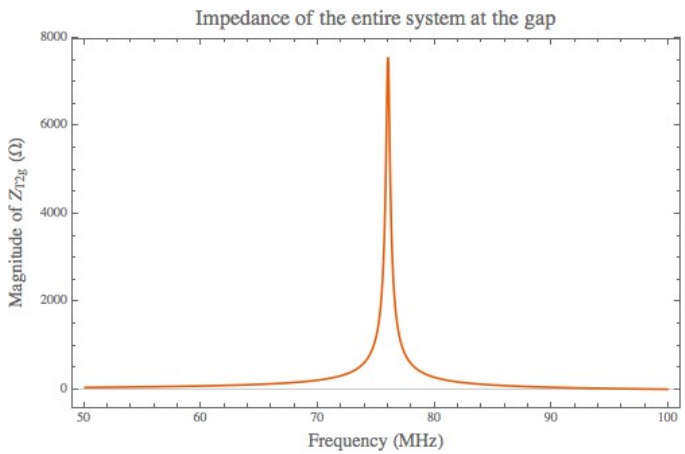

Fix by reducing the length of the ferrite section by 1 cm, i.e. by reducing the inductance. Get back 76 MHz.

The length of the coupler transmission line is l_c = 35 cm and characteristic impedance Z_c = 21Ω.

The impedance at "A" is Z_A = 6708 – 13.8i

=> Power reflected/Pmax = $|(Z_A-R_T)/(Z_A+R_T)|^2$ = 0.43.

Voltage along cavity

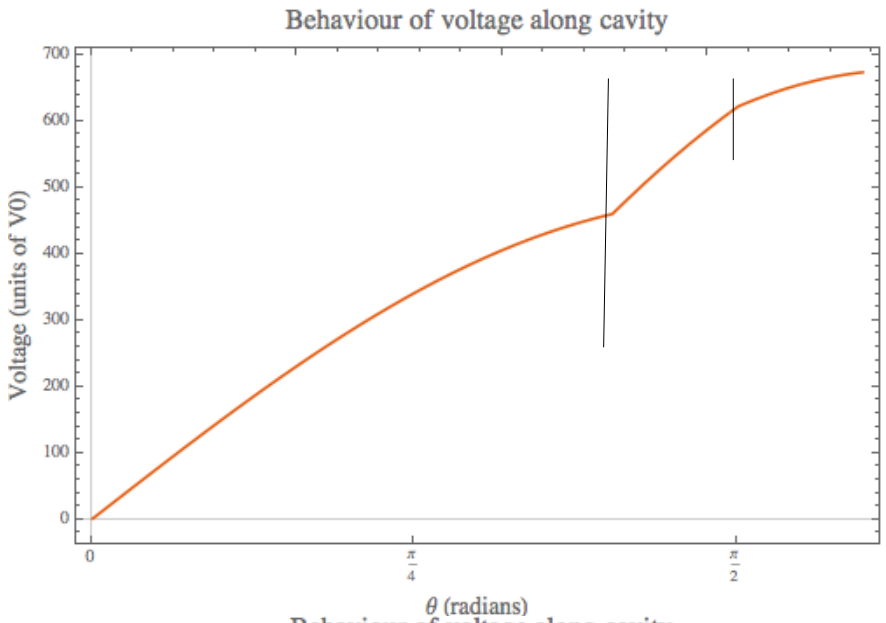

In terms of phase, the total length of the cavity is 108 degrees, i.e. it is neither a λ/4 or 3λ/4 cavity.

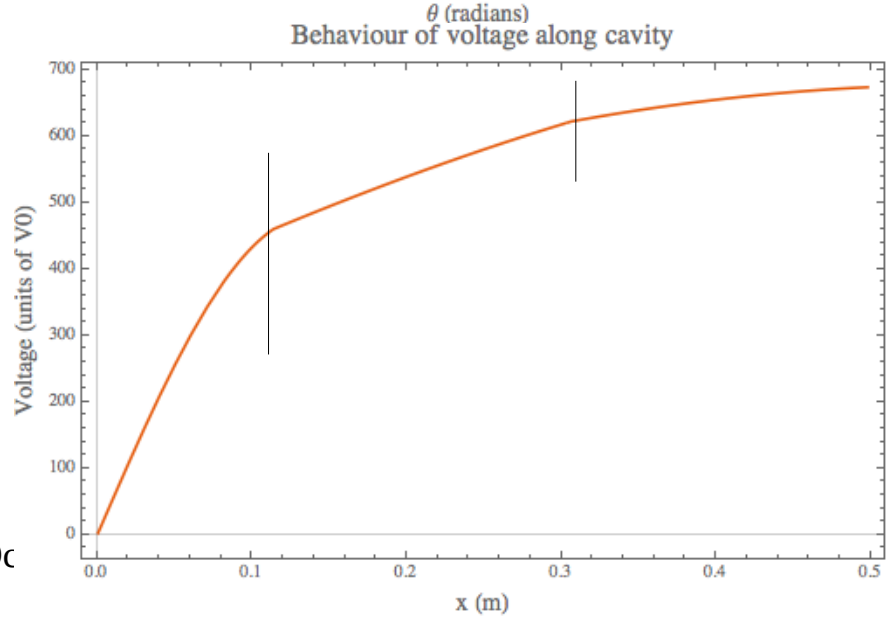

otal length of the cavity not including the gap is 49.9 cm.

With gap it is 53.9 cm.

The voltage step up is about 1.1 from the coupler to the gap

Oc

Step up voltage and power reflection

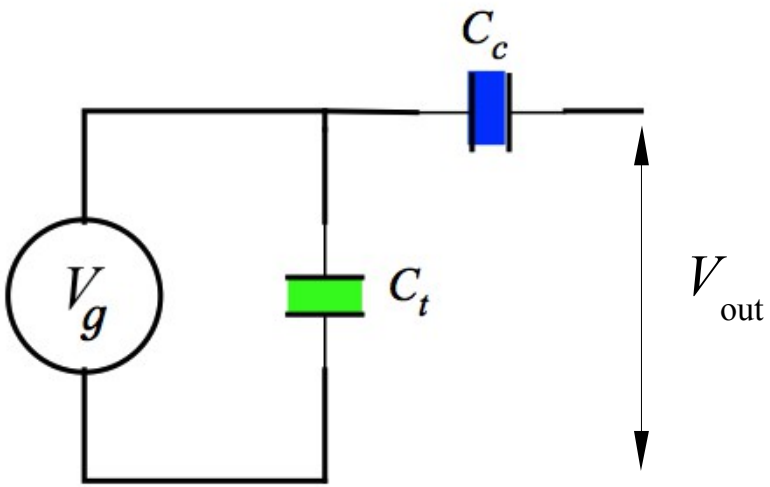

$V_{out}/V_g = (1 + C_t/C_c) = (1+ 60/10) = 7$

Step up voltage $V_{gap}/V_g = V_{out}/V_g$ *1.1
1.1 is from previous slide.

Therefore, step up voltage = 7*1.1 = 7.7

Power reflected/max Power = 43%.
Nominal max Power is 175 kWrms (considered safe) and so reflected power 0.43*175 = 75 kWrms and so we have 100 kWrms power going into the cavity.

Tube is rated for 150 kWrms REFLECTED power and so is still ok.

Is 100 kWrms sufficient to get 100 kV peak across the gap?
Require Vout = 100 kVpeak /7.7 = 13 kVpeak.
Output impedance of tetrode = 1.3 kΩ, Vpeak = sqrt(2*1.3 kW*100 kW) = 16 kV peak.

Conclusion

- I think we understand how to couple power into the cavity. The requirement for maximum power transfer is $Z_L = Z_g^*$.
- Adding a coupler shifts the resonant frequency from 76 MHz to 72 MHz.
  - Need to get the cavity back into resonance.
- We probably need to run the cavity with the RF **not** at resonance for Robinson stability
  - This means PA is better matched to cavity.
- Can probably calculate R/Q.
  - Foster's reactance theorem and Robyn's measurements of μ' and μ''