XFR Modification to Resetting Beam Sync (AA) and Offset Beam Sync (OAA) And Simulation and Test Results Version 2

Craig Drennan
May 5, 2015

VERSION 2

This note describes Version 2 of the Booster to MI/RECYCLER reset delay. In addition to using the Bucket Offset setting to fix the relationship between the reset signal and the OAA markers, the logic also ensures the "first" OAA after a reset appears with a fixed offset from the reset for all resets from 0 to 587. The previous document dated April 29, 2015 described a discrepancy between beam sync offset setting below 7 and those 7 or greater.

1 INTRODUCTION

If you are already familiar with what the Beam Sync and Offset Beam Sync are you should probably just skip the rest of the introduction unless you are interested in helping me find and correct the inaccuracies in the introduction. Rather move onto Section 2.

Two beam sync, timing pulses are generated by the XFR Module. The Beam Sync (AA marker) represents Bucket Zero with respect to the injected beam into the Main Injector/Recycler. The Offset Beam Sync (OAA marker) pulse occurs some number of RF counts or some bucket offset after the Beam Sync. The OAA marker is used by the Booster to compute when a Booster beam batch is to be extracted from the Booster so that it arrives at the MI/Recycler at the proper time to be injected at the desired bucket offset.

Several Booster cycles of beam, or batches, are injected into the MI/Recycler. Each batch of beam is inserted, injected into the MI/Recycler just behind the previous one. Once the desired number of batches have been delivered from the Booster into the MI/Recycler, the Booster either pauses or sends beam elsewhere while the MI/Recycler accelerates the beam it received and then delivers the beam to an experiment.

When the Booster is accelerating the first batch of beam, into an empty MI/Recycler, the Booster timing will predict when it is going to be extracting this first batch and sending a Beam Sync Reset signal (MI Reset). The prediction is made and the reset signal sent near the end of the acceleration cycle. This reset, in conjunction with the Bucket Offset establish the location of Bucket Zero, the AA marker and the OAA marker. The MI Reset signal is timed with respect to the predicted Booster extraction such that the OAA marker is retimed to occur when the first Booster batch of beam is injected into the MI/Recycler. The OAA marker established at the end of the first batch is used to time the extraction of the remaining Booster batches

2 Generation of Beam Sync and Offset Beam Sync Signals

The Beam Sync (AA) and the Offset Beam Sync (OAA) are generated by the XFR VXI electronics module in the Altera FPGA U18. Figure 2.1 is a *loose* illustration of the timing involved. The MI Reset signal is received by the XFR module and is synchronized to the MI/Recycler RF Clock. There is a fixed number of clocks between the reset and the AA marker. The Bucket Offset is an ACNET variable that defines the number of clocks between the AA marker and the OAA marker.

In order for the Booster timing logic to produce the MI Reset such that the resulting OAA marker is positioned with a fixed relationship to the injection of the first batch of beam into the MI/Recycler the Booster timing logic must know the Bucket Offset. This is the difficulty that we wish to remedy with the proposed modification.

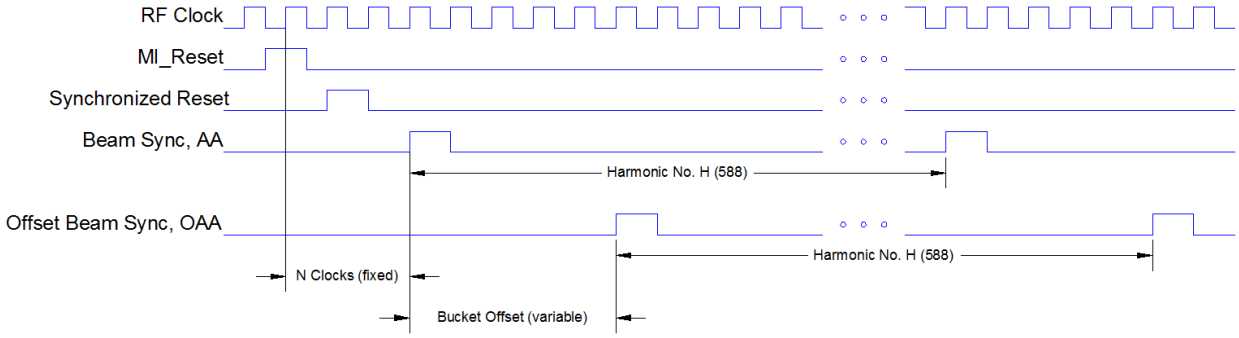

Figure 2.1 Timing of Beam Sync signals.

Currently if the MI/Recycler operators wish to change the Bucket Offset the Booster timing logic must be modified. The current Booster Cogging Controller logic has been patched to be able to do this, but a new Cogging Controller has been developed and it is a good time to consider a better way. If the Bucket Offset could be changed without having to modify logic in the Booster, this would give MI/Recycler operators more freedom in choosing it.

3 Proposed Modifications

3.1 Simplified Description of Added Delay Logic.

One possible change would be to send the Bucket Offset, set at the ACNET console, to both the XFR VXI Module and the Booster timing logic. Guaranteeing that the Offset value is updated in two places on the same cycle is difficult. Not updating the Offset in both places would cause significant beam loss.

The solution we are proposing is to make a simple modification to the logic in the XFR VXI module to delay the MI Reset a number of clocks based on the Bucket Offset setting. The MI Reset will be delayed such that the number of RF Clocks between the reset and the next OAA marker will be a fixed value independent of the Bucket Offset setting. Figure 3.1.1 is a simple timing diagram showing the delay between the MI Reset and the Delayed Reset.

The logic to produce the Offset Reset is shown in Figure 3.1.2. A simple simulation of this logic is shown in Figure 3.1.3.

Figure 3.1.4 gives an indication of where in the existing logic the Reset Delay block would be inserted.

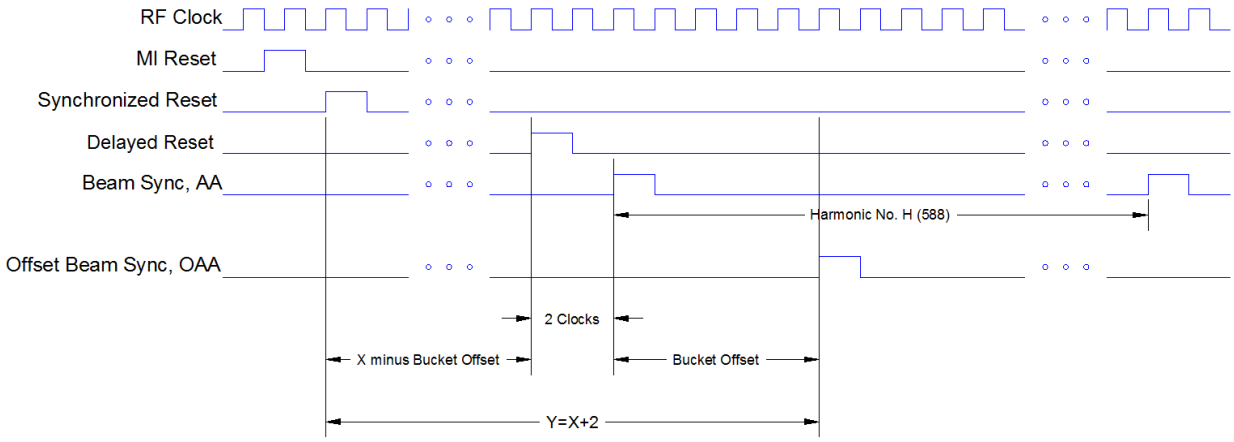

Figure 3.1.1 Simplified Timing for the new Delayed Reset

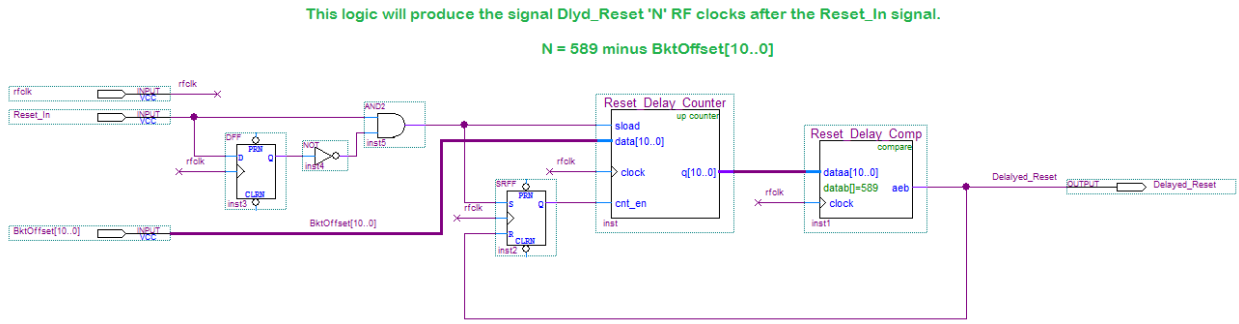

Figure 3.1.2 Simplified Reset Delay Logic

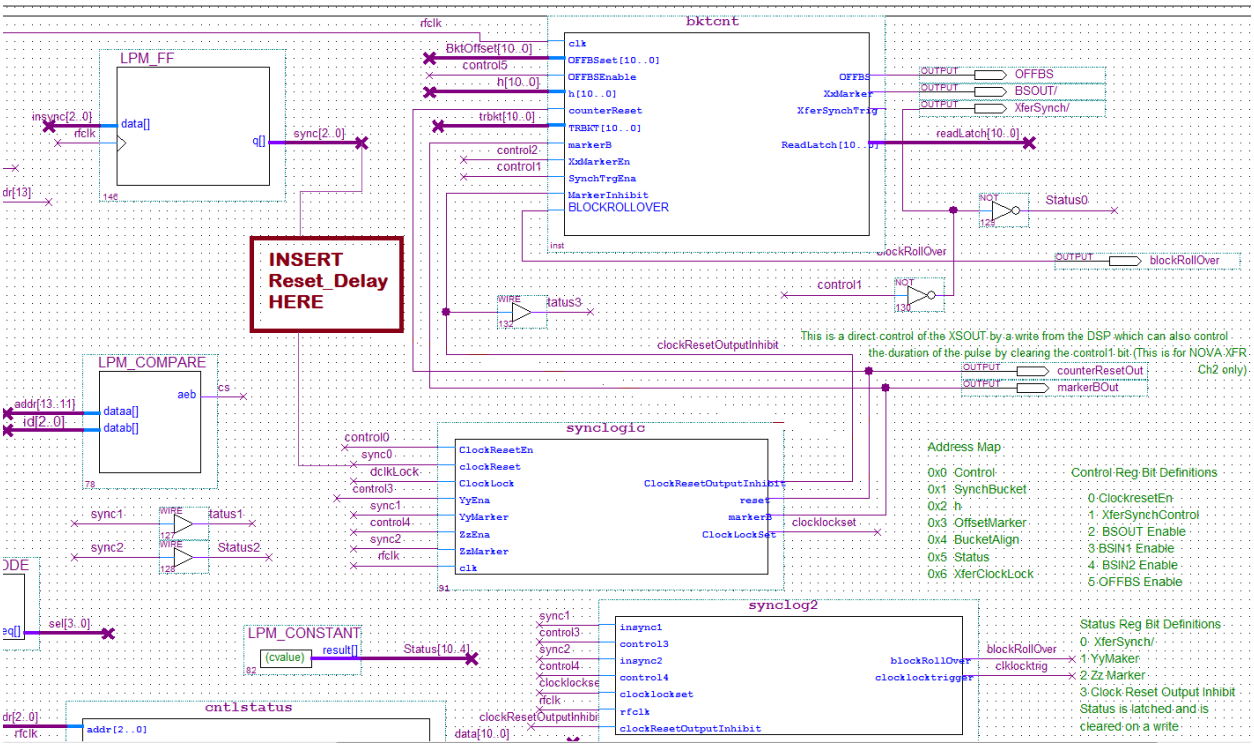

Figure 3.1.4 Indication of where in the existing logic the Reset Delay block would be inserted

3.2 Handling Offsets Below 7 and Those 7 or Greater

The designers of the existing logic use an rf bucket counter that starts at 6 when the reset is applied. Starting the count at 6 compensated for delays introduced by other synchronous logic elements in the signal path. The counter counts to 587 and rolls back to zero. After rolling back to zero it counts back up to 587 and repeats. Each time the count is rolled back to zero the Beam Sync, AA marker is generated. Each time the count reaches the Beam Sync Offset setting the Offset Beam Sync, OAA marker is produced. You can see that if the Beam Sync Offset is greater than 6 the OAA is produced before reaching the 587 count and before rolling back to zero and the appearance of the first AA marker. If the offset is 6 or less the counter counts up to 587, rolls back to zero, the AA marker is generated, and then the first OAA marker is produced.

We have chosen the method shown in Figure 3.2.1 to accommodate these two cases.

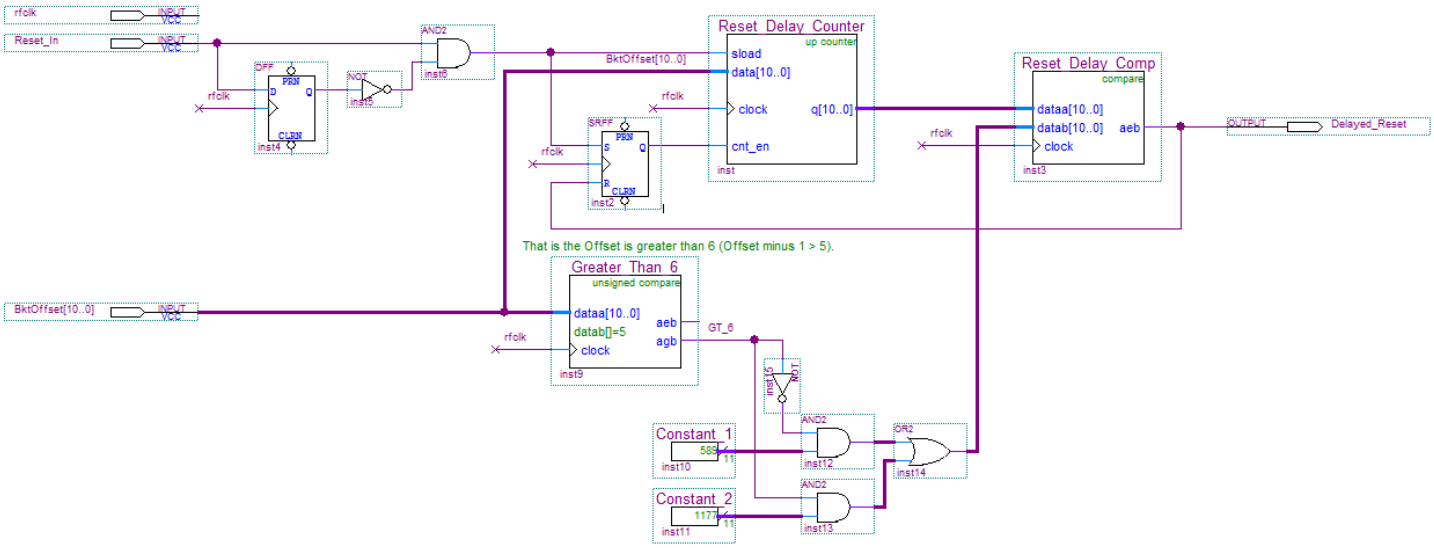

Figure 3.2.1 Version 2 of the Reset Delay Logic.

The total delay between the Booster MI Reset and the first OAA marker is the sum of the rf bucket counter counting between 6 and the marker offset setting,

$$rf\ count\ delay = \begin{cases} Offset - 6, & Case\ 1: Offset > 6 \\ Offset + 588 - 6, & Case\ 2: Offset \leq 6 \end{cases}$$

And the new reset delay logic,

$$reset\ delay = \begin{cases} 588 + 589 - Offset, & Case\ 1: Offset > 6 \\ 589 - Offset, & Case\ 2: Offset \leq 6 \end{cases}$$

The sum in both cases is then,

$$total\ delay = 588 + 589 - Offset + Offset - 6 = 1171\ rf\ counts = 22.18\ us$$

Further, we can consider all of the synchronization and other clocked logic from the reset input to the OAA marker output. This is, for the current modified logic, 7 to 8 rf clocks. So the final delay is

$$final\ delay = 588 + 589 - Offset + Offset - 6 + 7.5 = 1178.5\ rf\ counts = 22.32\ us$$

4 Logic Testing

4.1 Altera FPGA Configuration

There is a single EPROM configuration device on the XFR Module that programs three FPGA's. U18 is the timing logic for Channel 1, U19 is the timing logic for Channel 2 and U20 decodes MDAT. When programming a new configuration EPROM, the code for all three FPGA's must be combined into a single *.pof programming file with which to burn the EPROM. The Altera Stat Sheet that describes how an EPROM was programmed is given in Listing 4.1

```
Module Name: XFR
(Recycler Nova U19 version Plus Booster Reset Delay U18 version)
Files to be found @
\\beamssrv1\rf.bd\projects\LLRF\Components\Hardware\Altera files\XFR\xfru21_Booster_Nova\

Maxplus or Quartus version compiled last: Quartus 9.0
Project name: XFRU21_Booster_Nova
Compilation Date: 05/6/2015
Device type: EPF10K20TC144-3
Programming files (POF and/or SOF):   cogging.sof  (NEW file for U18)
                                      Cogging_nova_Ch2.sof  (file for U19)
                                      U20.sof  (file for U20)
                                      xfru21_B_N_v2.pof  (pof resulting from the combination)

POF Checksum:  00BC9AF0
```

Listing 4.1 Altera Stat Sheet data for programming the EPROM.

4.2 Test Stand Setup

The AD/RF Group maintains VXI test crates, processors and test code for testing and maintaining Main Injector VXI RF modules such as the XFR. The crate/processor environment used for testing the XFR was running in sync with the MI TClk's and MDAT States. The Booster typically sends the MI Reset signal near the end of the Booster cycle producing the first batch of beam to the MI. The first Booster batch cycle is typically the first $19 event following the $12 event. Therefore, a function generator was setup to output a reset pulse 96 ms after the $12 event trigger. This is expected to produce the reset pulse 30 ms into the first batch Booster cycle. Measurements were made on the time offset of the first XFR OFFBS (OAA marker) with respect to the rising-edge of the reset pulse. Measurements were then made of four BSOUT (AA marker) and the remaining three OFFBS (OAA marker).

Time relationships were later adjusted to compensate for delays in the connecting cables.

Delay scope to RESETIN = 12 ns
Delay BSOUT to scope = 20.2 ns
Delay OFFBS to scope = 8 ns

Figure 4.2.1 illustrates the test setup. Figure 4.2.2 shows the ACNET page used to setup the module and set different BS Offsets.

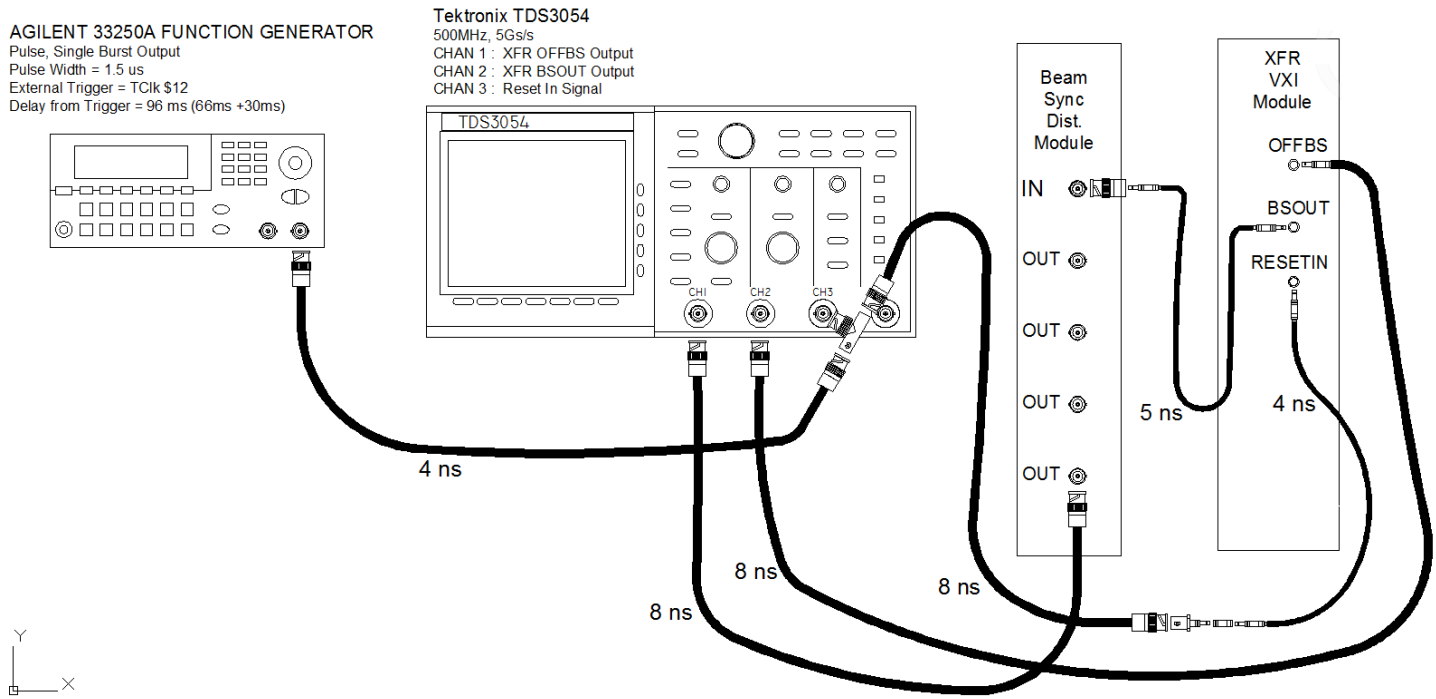

Figure 4.2.1 Test Setup

On ACNET, the R6 page was used to setup the XFR and set various BS Offsets (XferSyncRRNVtoBooster).

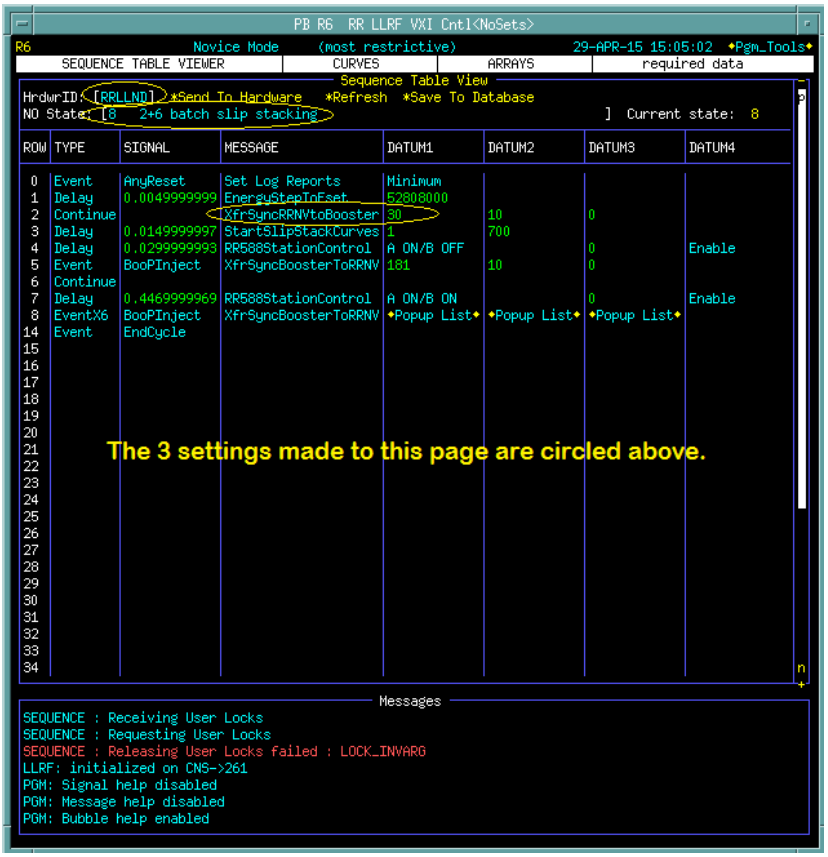

PB R6 RR LLRF VXI Cntl<NoSets>

R6 Novice Mode (most restrictive) 29-APR-15 15:05:02 ♦Pgm_Tools♦

SEQUENCE TABLE VIEWER | CURVES | ARRAYS | required data

Sequence Table View

HrdwrID: [RRLLND] *Send To Hardware *Refresh *Save To Database

NO State: [8 2+6 batch slip stacking] Current state: 8

ROW	TYPE	SIGNAL	MESSAGE	DATUM1	DATUM2	DATUM3	DATUM4
0	Event	AnyReset	Set Log Reports	Minimum			
1	Delay	0.0049999999	EnergyStepInEset	52808000			
2	Continue		XfrSyncRRNVtoBooster	30	10	0	
3	Delay	0.0149999997	StartSlipStackCurves	1	700		
4	Delay	0.0299999993	RR5888StationControl	A ON/B OFF		0	Enable
5	Event	BooPInject	XfrSyncBoosterToRRNV	181	10	0	
6	Continue						
7	Delay	0.4469999969	RR5888StationControl	A ON/B ON		0	Enable
8	EventX6	BooPInject	XfrSyncBoosterToRRNV	♦Popup List♦	♦Popup List♦	♦Popup List♦	
14	Event	EndCycle					

The 3 settings made to this page are circled above.

Messages

SEQUENCE : Receiving User Locks
SEQUENCE : Requesting User Locks
SEQUENCE : Releasing User Locks failed : LOCK_INVARG
LLRF: initialized on CNS->261
PGM: Signal help disabled
PGM: Message help disabled
PGM: Bubble help enabled

Figure 4.2.2 ACNET Settings.

4.3 Test Results

The resulting marker times are listed in the tables below. In the standard XFR (un-modified) the AA markers were stationary w.r.t. the reset, at times; 11.130 us, 22.266 us, 33.394 us, etc.. The OAA markers were delayed w.r.t. the AA markers by the set offset.

Second Measurements on Standard XFR 4/28/2015

	Scope Time Measurement																		
	First AA		First OAA		Second AA		Second OAA			Third AA		Third OAA			Fourth AA			Fourth OAA	
OFFSET	Adjust Mean T for cable lengths	# of Buckets from Reset	Adjust Mean T for cable lengths	# of Buckets from Reset	Adjust Mean T for cable lengths	Buckets from First AA	Adjust Mean T for cable lengths	Buckets from First OAA	buckets from Second AA	Adjust Mean T for cable lengths	Buckets from Second AA	Adjust Mean T for cable lengths	Buckets from Second OAA	buckets from Third AA	Adjust Mean T for cable lengths	Buckets from Third AA	Adjust Mean T for cable lengths	Buckets from Third OAA	buckets from Fourth AA
0					11.1303		11.1225		0	22.2675	588	22.2671	588	0	33.3960	588	33.4049	588	0
1					11.1258		11.1444		1	22.2669	588	22.2849	588	1	33.3947	588	33.4122	588	1
2					11.1262		11.1654		2	22.2672	588	22.3050	588	2	33.3961	588	33.4354	588	2
7					11.1266		11.2631		7	22.2677	588	22.3973	588	7	33.3950	588	33.5266	588	7
8			0.1433	8	11.1264		11.2753	588	8	22.2670	588	22.4132	588	8	33.3943	588	33.5484	588	8
30			0.5630	30	11.1307		11.6971	588	30	22.2672	588	22.8321	588	30	33.3949	588	33.9607	588	30
150			2.8397	150	11.1296		13.9663	587	150	22.2670	588	25.1069	588	150	33.3945	588	36.2367	588	150
270			5.1038	269	11.1299		16.2458	588	270	22.2670	588	27.3771	588	270	33.3947	588	38.5092	588	270
390			7.3791	390	11.1300		18.5173	588	390	22.2670	588	29.6451	588	390	33.3947	588	40.7828	588	390
510			9.6515	510	11.1274		20.7897	588	510	22.2671	588	31.9248	588	510	33.3950	588	43.0576	588	510
586			11.0909	586	11.1269		22.2234	588	586	22.2662	588	33.3588	588	586	33.3952	588	44.4948	588	586
587			11.1074	586	11.1262		22.2430	588	587	22.2672	588	33.3781	588	587	33.3946	588	44.5180	588	587

First Measurement on Version 2 Modified XFR 5/6/2015

	Scope Time Measurement																		
	First AA		First OAA		Second AA		Second OAA			Third AA		Third OAA			Fourth AA		Fourth OAA		
OFFSET	Delta T from First OAA adjusted for cable lengths	# of Buckets from First OAA	Adjust Mean T for cable lengths	# of Buckets from Reset	Delta T from First OAA adjusted for cable lengths	Buckets from First AA	Delta T from First OAA	Buckets from First OAA	buckets from Second AA	Delta T from First OAA adjusted for cable lengths	Buckets from Second AA	Delta T from First OAA	Buckets from Second OAA	buckets from Third AA	Delta T from First OAA adjusted for cable lengths	Buckets from Third AA	Delta T from First OAA	Buckets from Third OAA	buckets from Fourth AA
0	0.0042	0	22.3187	1178.4	11.1389	588	11.1354	588	0	22.2738	588	22.2702	588	0	33.4091	588	33.4051	588	0
1	-0.0146	-1	22.3184	1178.4	11.1202	588	11.1352	588	1	22.2549	588	22.2701	588	1	33.3902	588	33.4053	588	1
2	-0.0339	-2	22.3180	1178.4	11.1011	588	11.1352	588	2	22.2361	588	22.2701	588	2	33.3712	588	33.4053	588	2
6	-0.1096	-6	22.3181	1178.4	11.0253	588	11.1352	588	6	22.1603	588	22.2701	588	6	33.2955	588	33.4053	588	6
7			22.3189	1178.4	11.0064		11.1352	588	7	22.1414	588	22.2701	588	7	33.2767	588	33.4053	588	7
30			22.3190	1178.4	10.5709		11.1352	588	30	21.7058	588	22.2701	588	30	32.8410	588	33.4053	588	30
150			22.3189	1178.4	8.2985		11.1352	588	150	19.4336	588	22.2701	588	150	30.5684	588	33.4053	588	150
270			22.3188	1178.4	6.0261		11.1352	588	270	17.1610	588	22.2701	588	270	28.2960	588	33.4053	588	270
390			22.3190	1178.4	3.7534		11.1352	588	390	14.8886	588	22.2701	588	390	26.0237	588	33.4053	588	390
510			22.3191	1178.4	1.4810		11.1352	588	510	12.6160	588	22.2701	588	510	23.7511	588	33.4053	588	510
586			22.3180	1178.4	0.0420		11.1352	588	586	11.1766	588	22.2701	588	586	22.3118	588	33.4053	588	586
587			22.3184	1178.4	0.0229		11.1352	588	587	11.1580	588	22.2701	588	587	22.2930	588	33.4053	588	587

5 Simulation of New Logic

Note that the harmonic number 'h', 588 for the MI and RR, written to the FPGA is reduced by 2 counts. The Bucket Offset written to the FPGA is reduced by 1. If the Bucket offset was originally 0 (zero) then this value is set to 587. These two values are input to 11 bit comparators. The adjustments compensate for the surrounding logic that synchronize results and reset the counter. The adjustments are made in the DSP that writes the FPGA.

Figure 5.1 is the logic used in the simulation. A careful analysis of all of the logic of FPGA U18 was made and logic paths unaffected by the Booster MI Reset signal were removed. More could have been removed, less could have been removed, but it is believed that what was retained made for a valid simulation.

The one clock delay of Marker_Enable seen in Figure 5.1 was added to prevent a rare occurrence that would result in an early OAA marker immediately after the Marker_Enable goes active. The Marker_Enable could would go active one

clock before the Bucket Counter was set to 6. If the counter output happened to match the Bucket Offset at this moment, an early OAA would fire causing the Booster to extract Beam at the wrong time.

The first set of simulations were done (and a week of trial in the actual RR LLRF system) before adding this one clock delay to Marker_Enable.

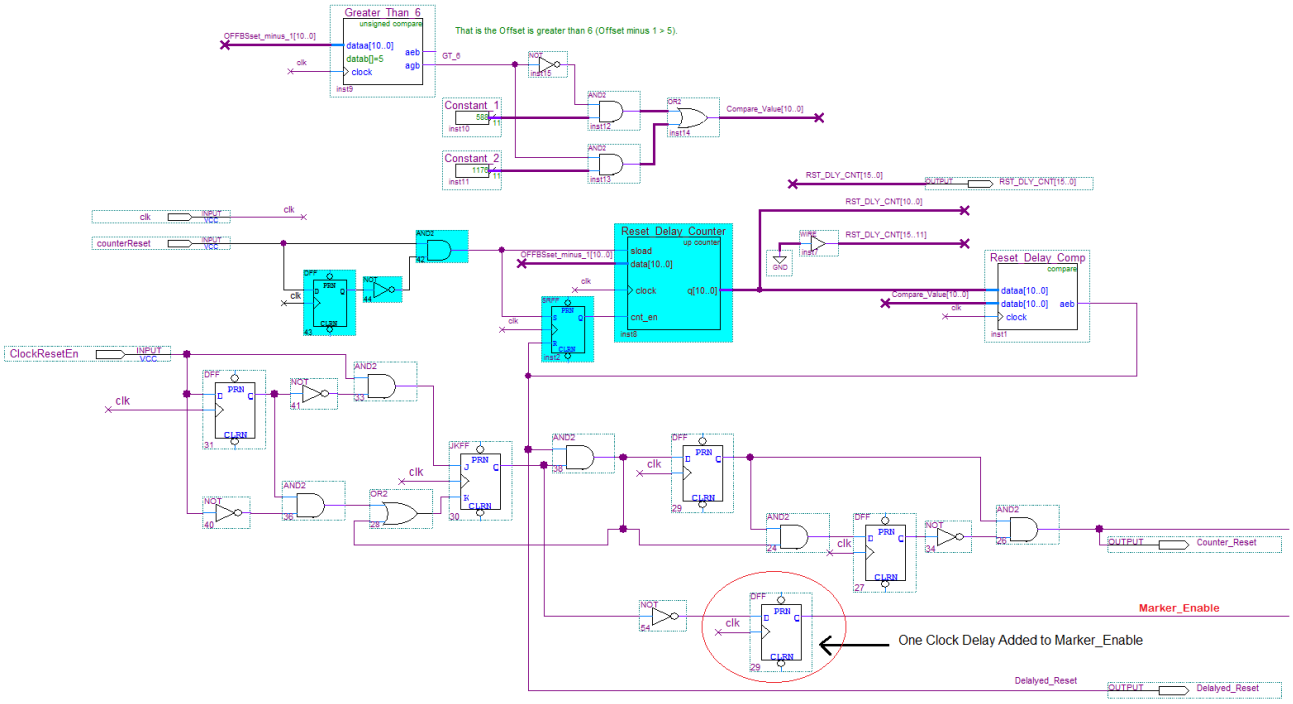

==========Continued Below ==========

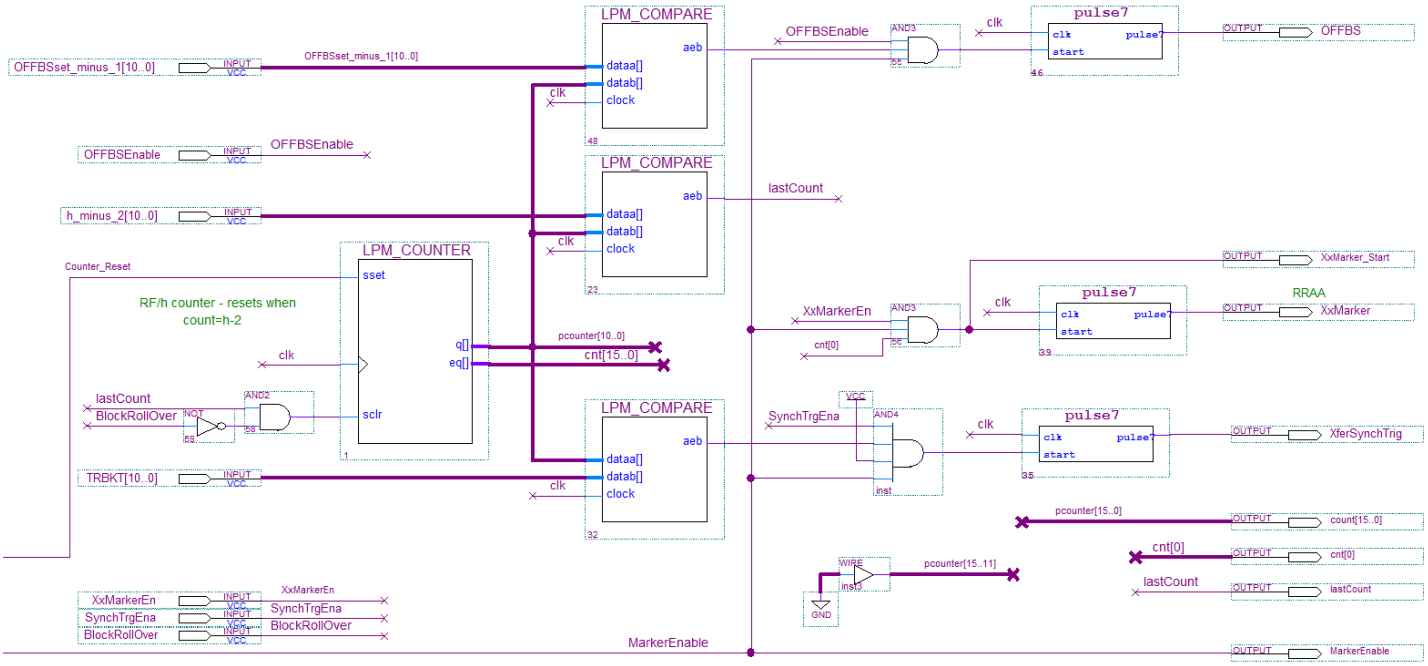

Figure 5.1 Logic used in simulation.

NOTE THAT THE rf Clock in the simulation is 20ns for simplicity.

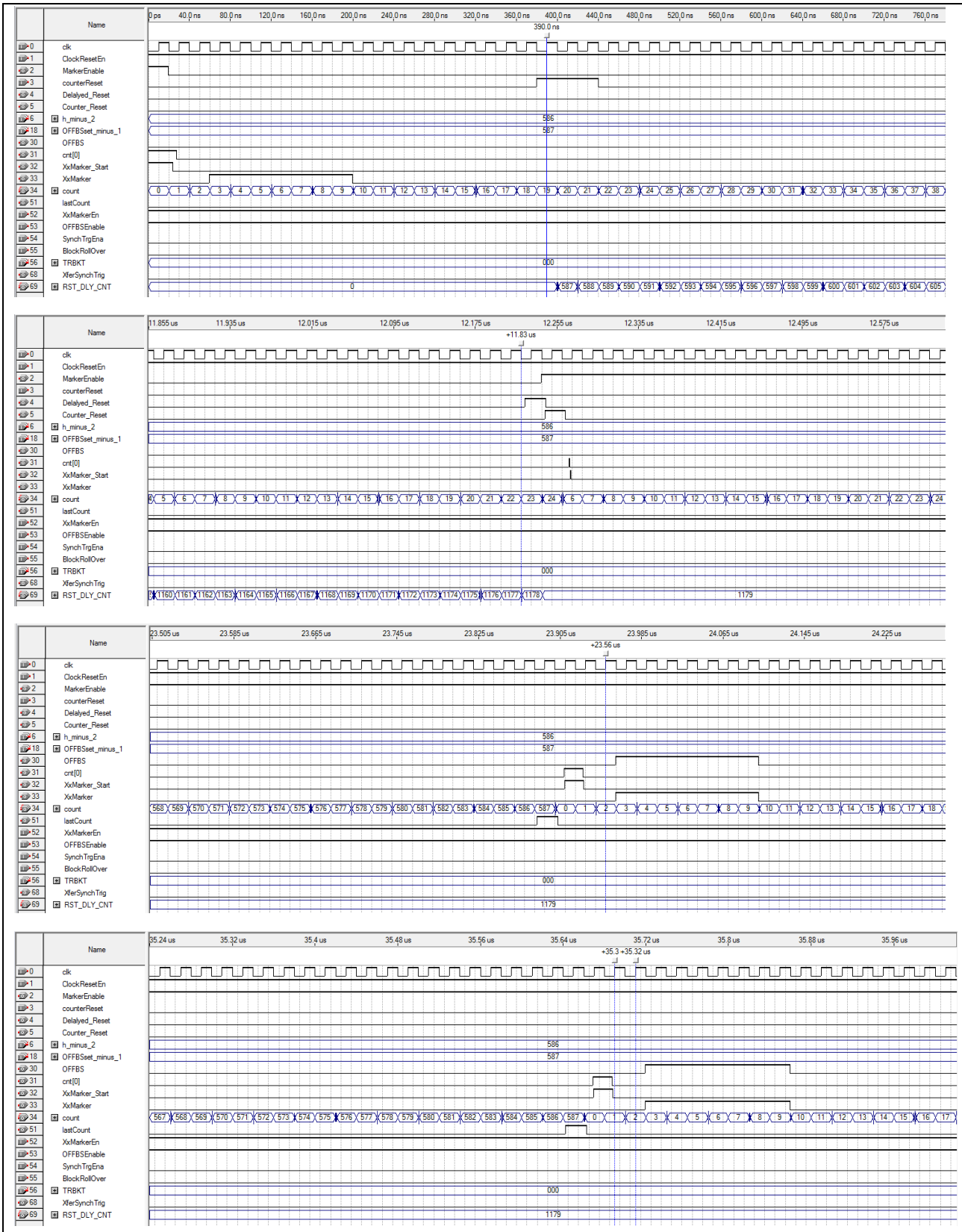

Figure 5.1 Logic Simulation for Bucket Offset of 0.

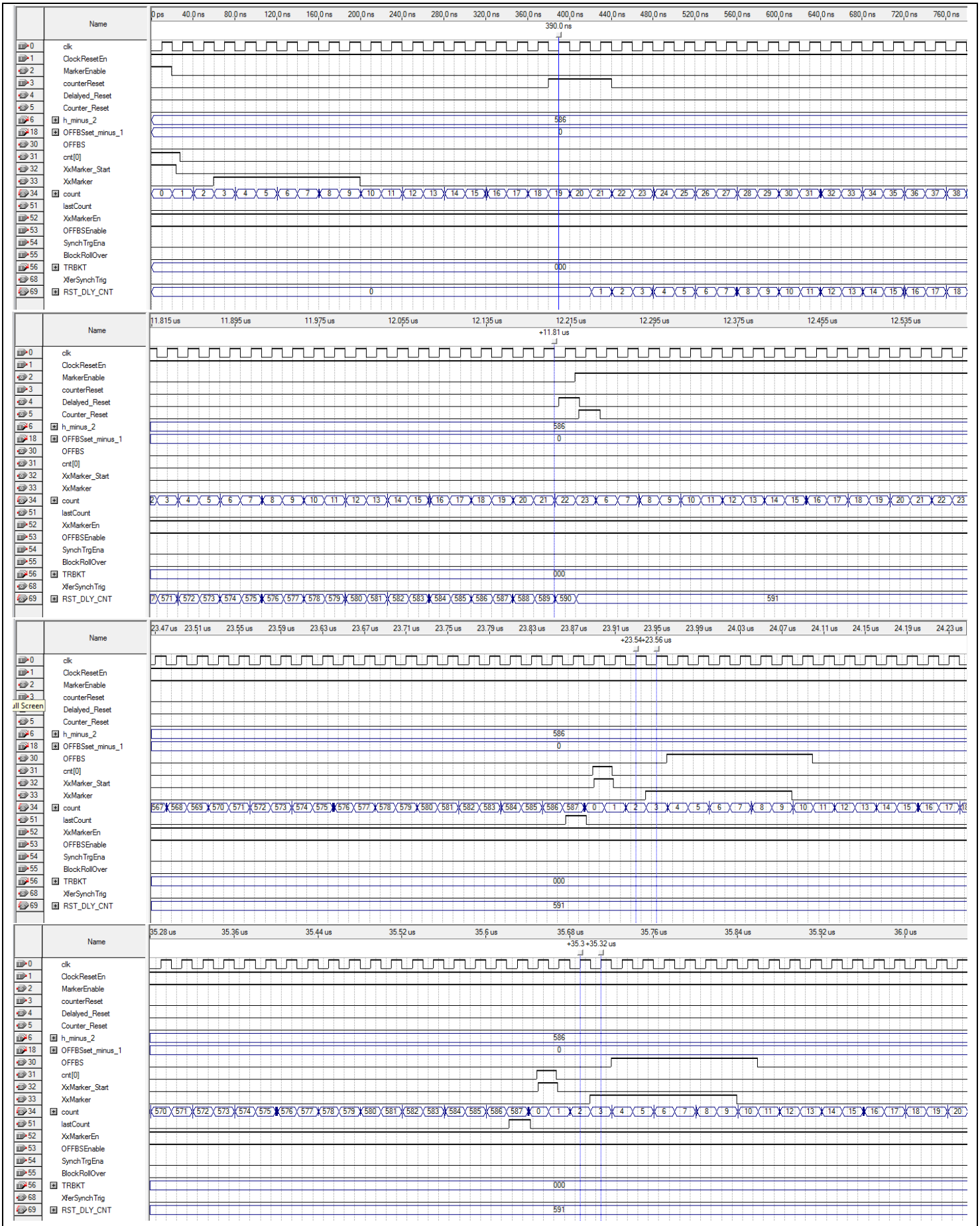

Figure 5.2 Logic Simulation for Bucket Offset of 1.

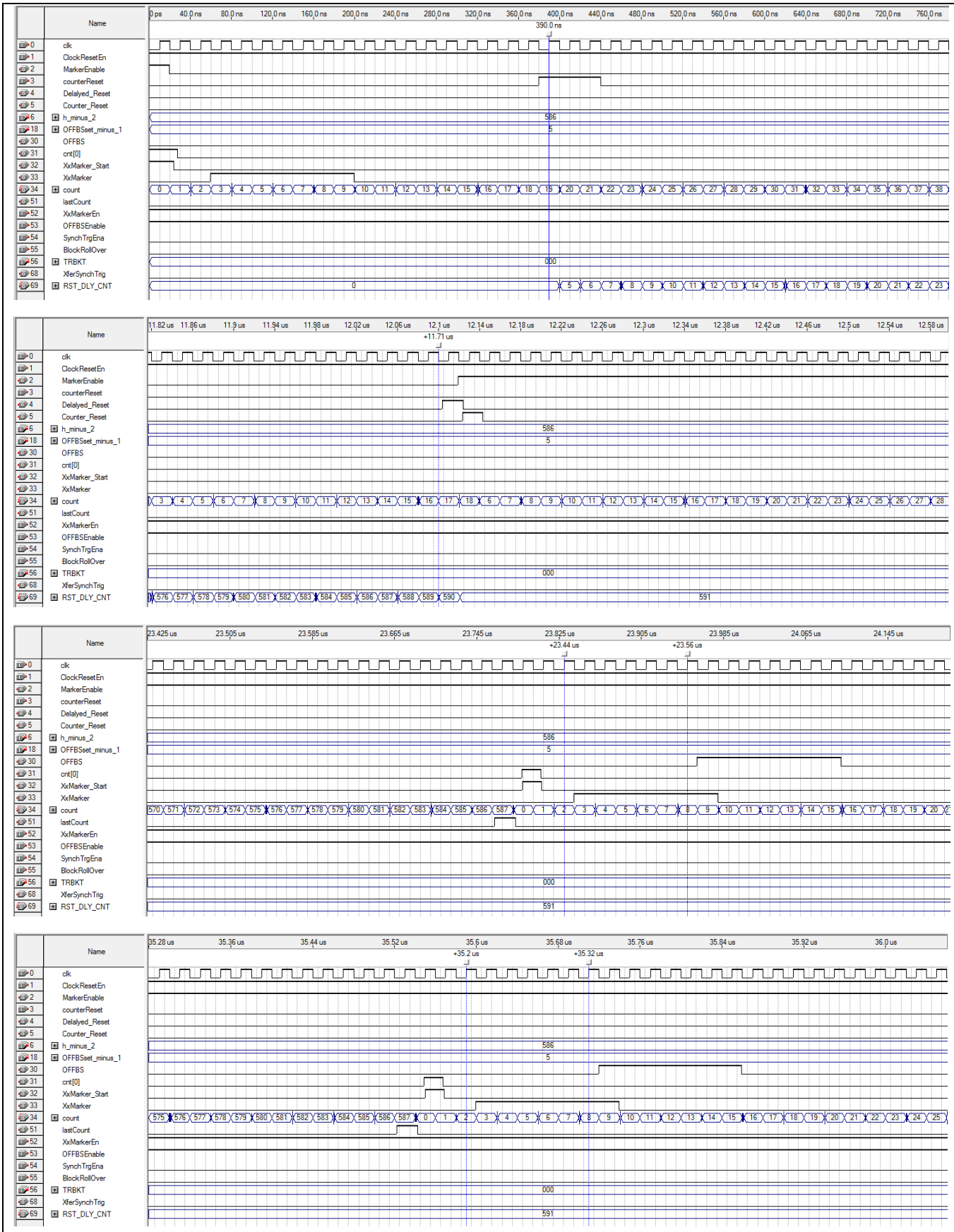

Figure 5.3 Logic Simulation for Bucket Offset of 6.

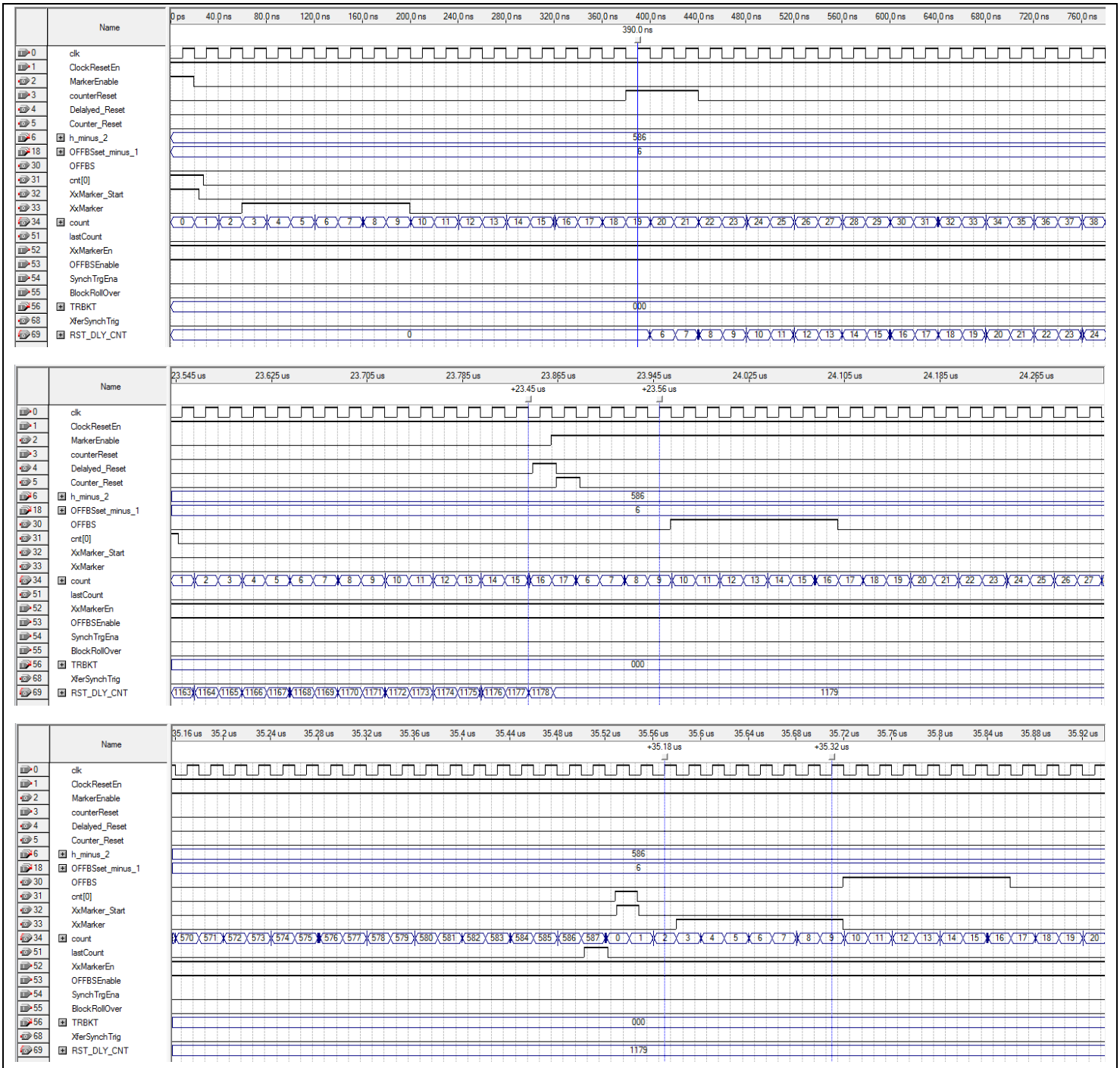

Figure 5.4 Logic Simulation for Bucket Offset of 7.

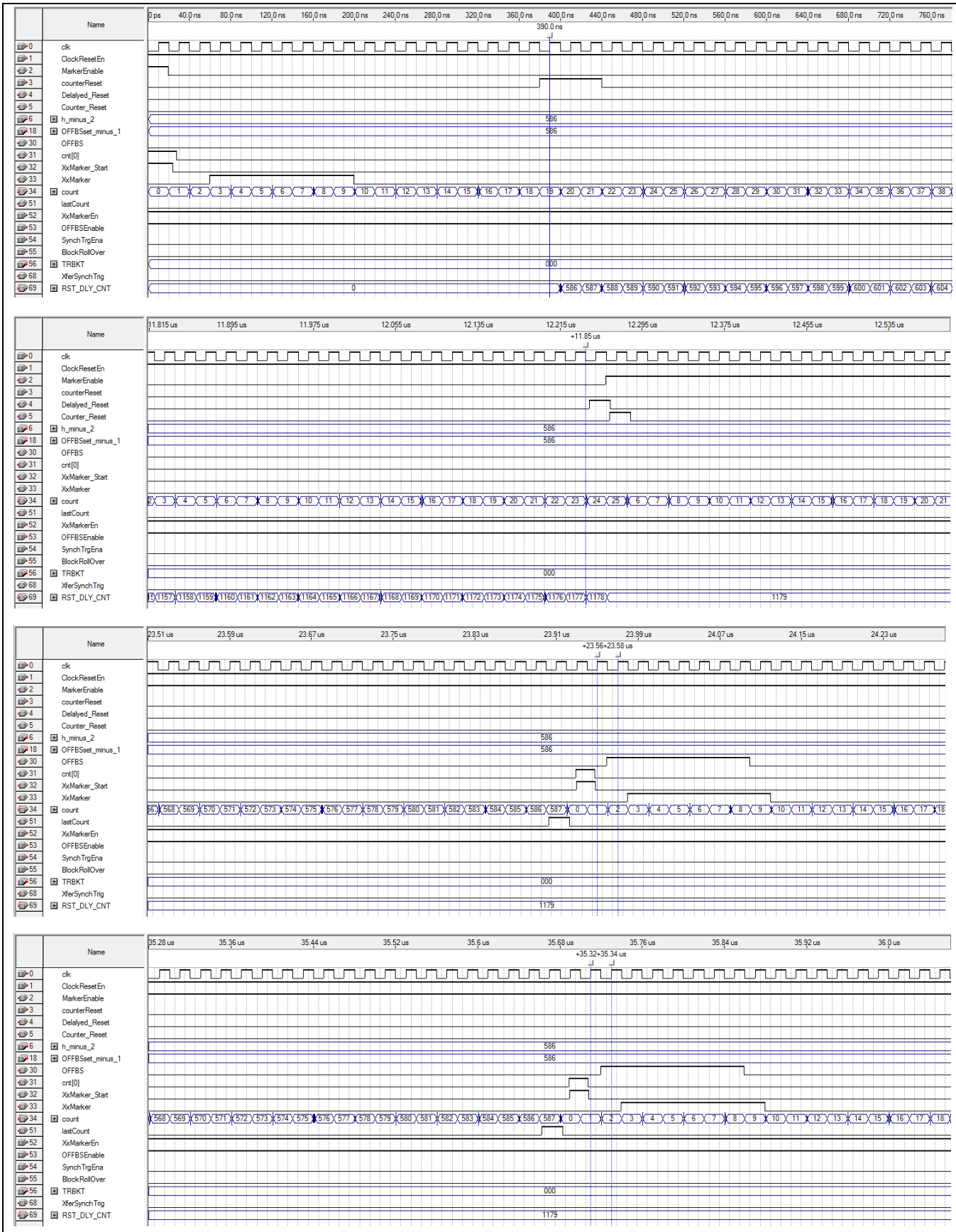

Figure 5.5 Logic Simulation for Bucket Offset of 587.

Figure 5.6 Error Condition, Bucket Offset 97 chosen for example.

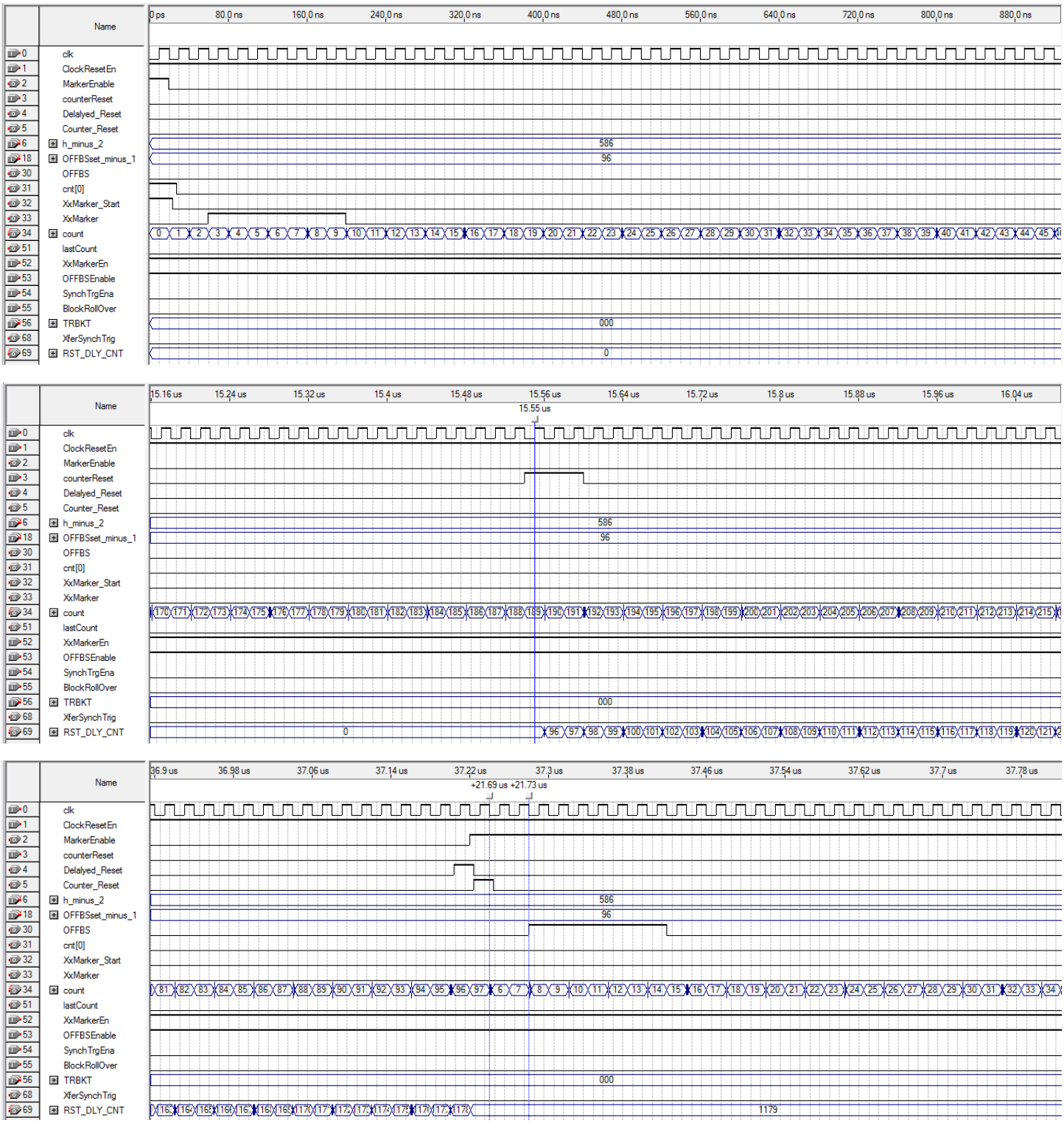

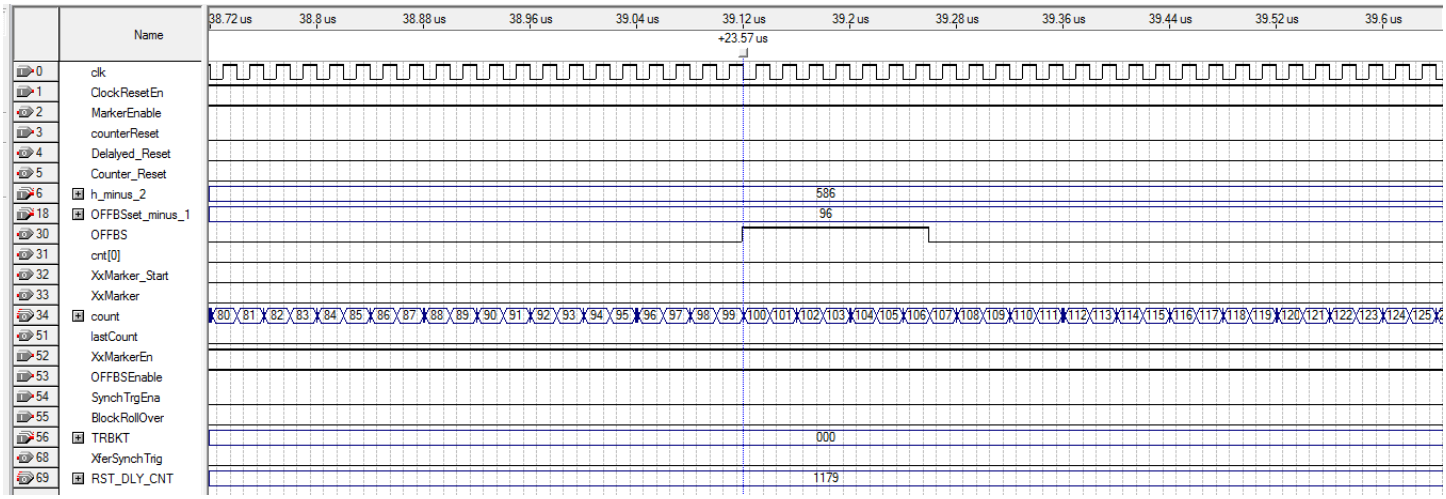
Name
38.72 us
38.8 us
38.88 us
38.96 us
39.04 us
39.12 us
39.2 us
39.28 us
39.36 us
39.44 us
39.52 us
39.6 us
+23.57 us
0 clk
1 ClockResetEn
2 MarkerEnable
3 counterReset
4 Delayed_Reset
5 Counter_Reset
6 h_minus_2
586
18 OFFBSset_minus_1
96
30 OFFBS
31 cnt[0]
32 XxMarker_Start
33 XxMarker
34 count
51 lastCount
52 XxMarkerEn
53 OFFBSEnable
54 SynchTrgEna
55 BlockRollOver
56 TRBKT
000
68 XferSynchTrig
69 RST_DLY_CNT
1179

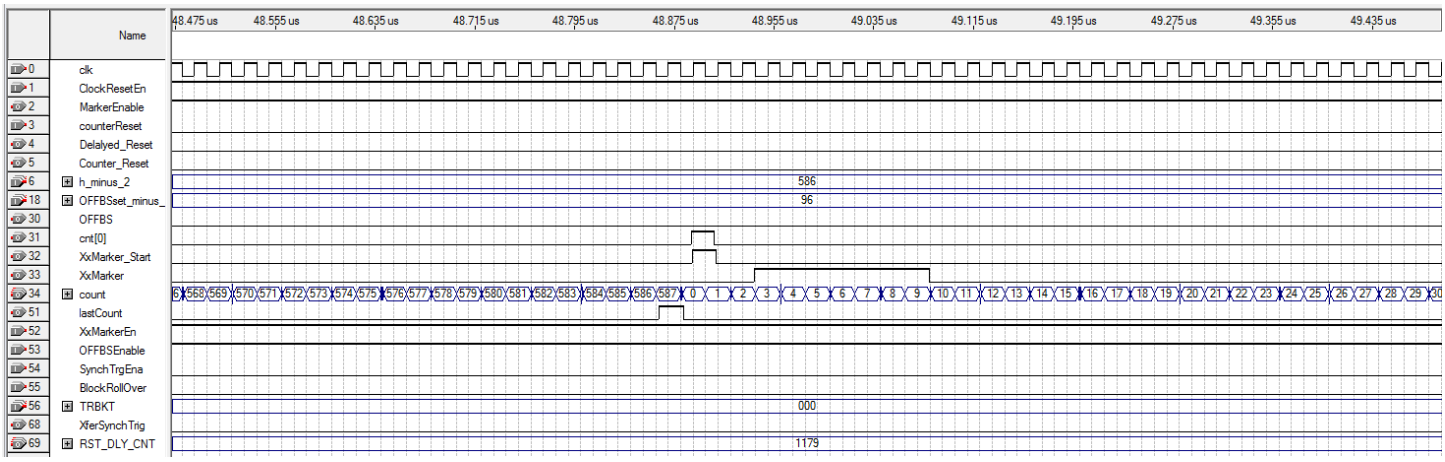
Name
48.475 us
48.555 us
48.635 us
48.715 us
48.795 us
48.875 us
48.955 us
49.035 us
49.115 us
49.195 us
49.275 us
49.355 us
49.435 us
0 clk
1 ClockResetEn
2 MarkerEnable
3 counterReset
4 Delayed_Reset
5 Counter_Reset
6 h_minus_2
586
18 OFFBSset_minus_
96
30 OFFBS
31 cnt[0]
32 XxMarker_Start
33 XxMarker
34 count
51 lastCount
52 XxMarkerEn
53 OFFBSEnable
54 SynchTrgEna
55 BlockRollOver
56 TRBKT
000
68 XferSynchTrig
69 RST_DLY_CNT
1179

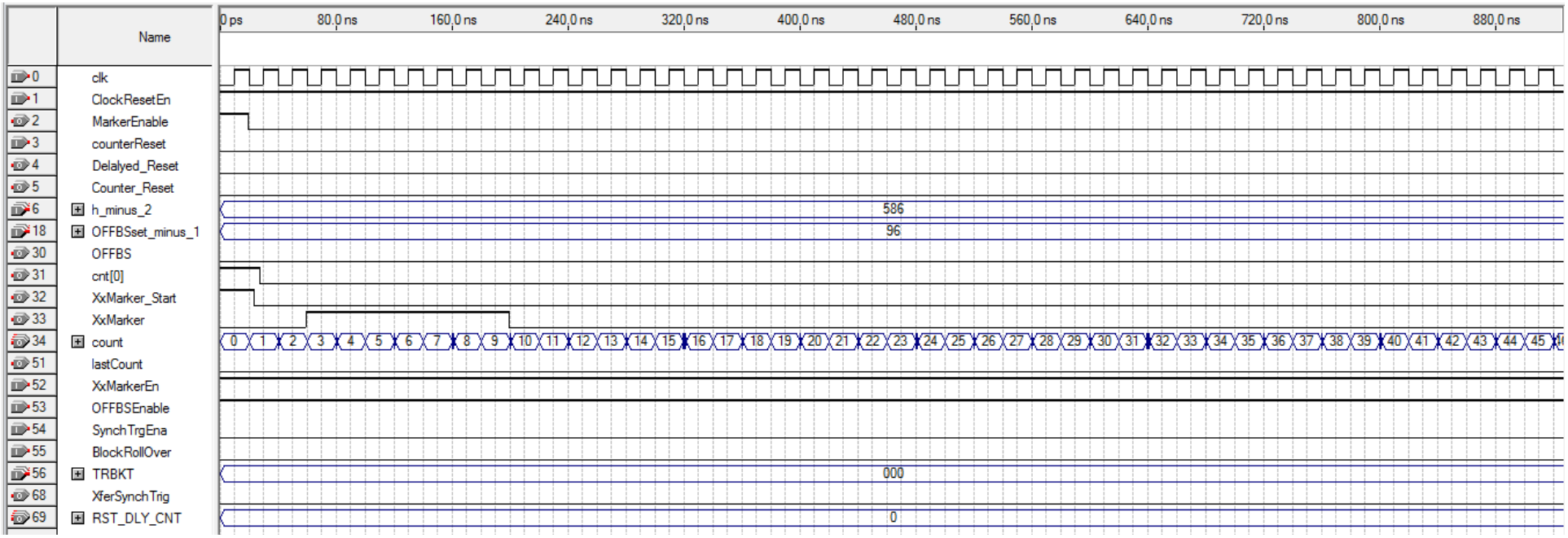
Name
0 ps
80,0 ns
160,0 ns
240,0 ns
320,0 ns
400,0 ns
480,0 ns
560,0 ns
640,0 ns
720,0 ns
800,0 ns
880,0 ns
0 clk
1 ClockResetEn
2 MarkerEnable
3 counterReset
4 Delayed_Reset
5 Counter_Reset
6 h_minus_2
18 OFFBSset_minus_1
30 OFFBS
31 cnt[0]
32 XxMarker_Start
33 XxMarker
34 count
51 lastCount
52 XxMarkerEn
53 OFFBSEnable
54 SynchTrgEna
55 BlockRollOver
56 TRBKT
68 XferSynchTrig
69 RST_DLY_CNT
586
96
000
0

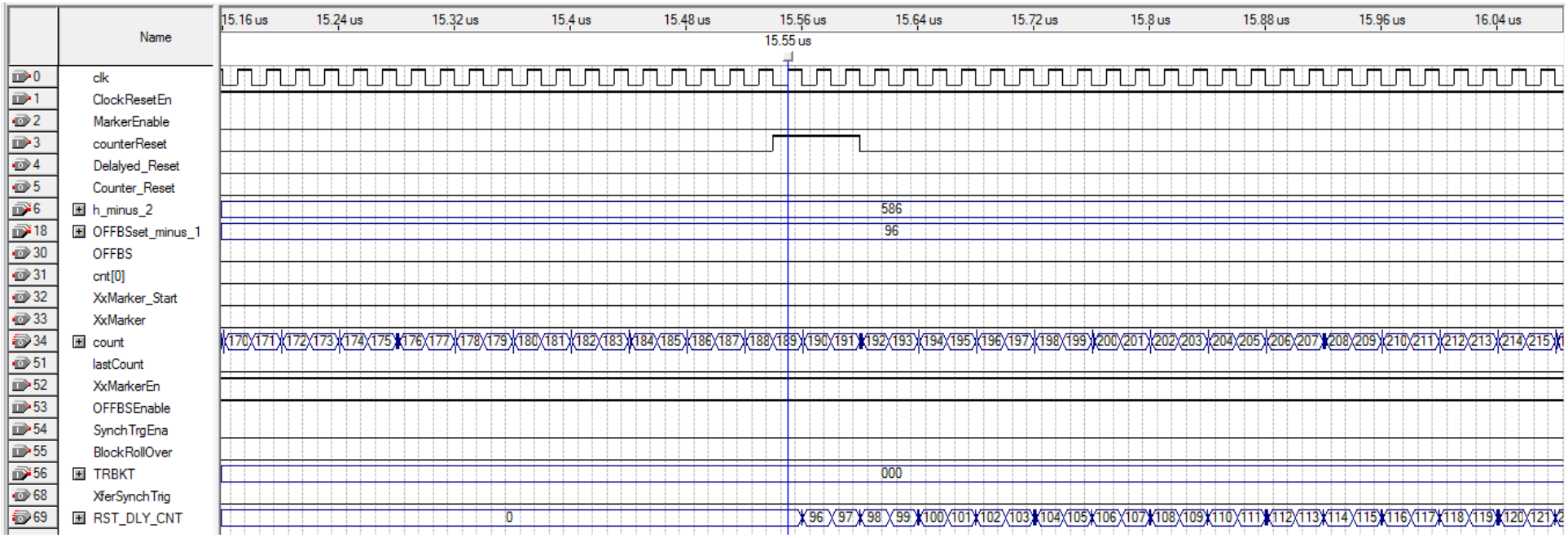
Name
15.16 us
15.24 us
15.32 us
15.4 us
15.48 us
15.56 us
15.64 us
15.72 us
15.8 us
15.88 us
15.96 us
16.04 us
15.55 us
0 clk
1 ClockResetEn
2 MarkerEnable
3 counterReset
4 Delayed_Reset
5 Counter_Reset
6 h_minus_2
18 OFFBSset_minus_1
30 OFFBS
31 cnt[0]
32 XxMarker_Start
33 XxMarker
34 count
51 lastCount
52 XxMarkerEn
53 OFFBSEnable
54 SynchTrgEna
55 BlockRollOver
56 TRBKT
68 XferSynchTrig
69 RST_DLY_CNT
586
96
000
0

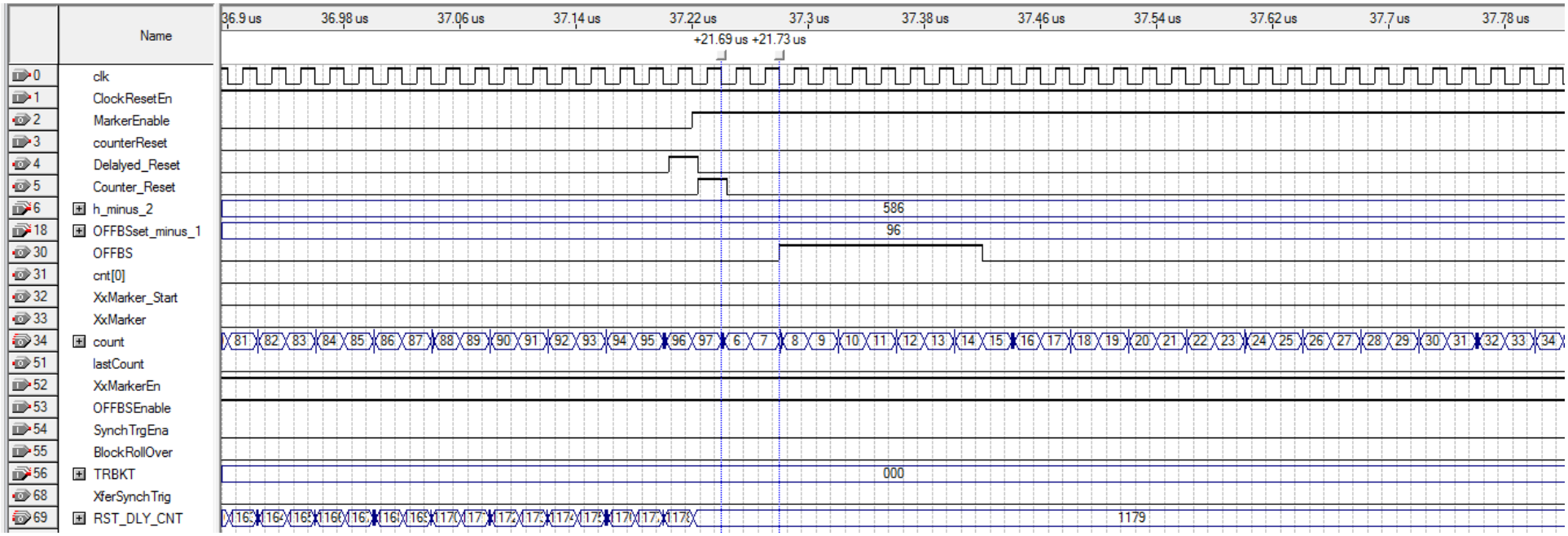
Name
36.9 us
36.98 us
37.06 us
37.14 us
37.22 us
37.3 us
37.38 us
37.46 us
37.54 us
37.62 us
37.7 us
37.78 us
+21.69 us
+21.73 us
0 clk
1 ClockResetEn
2 MarkerEnable
3 counterReset
4 Delayed_Reset
5 Counter_Reset
6 h_minus_2
586
18 OFFBSset_minus_1
96
30 OFFBS
31 cnt[0]
32 XxMarker_Start
33 XxMarker
34 count
51 lastCount
52 XxMarkerEn
53 OFFBSEnable
54 SynchTrgEna
55 BlockRollOver
56 TRBKT
000
68 XferSynchTrig
69 RST_DLY_CNT
1179

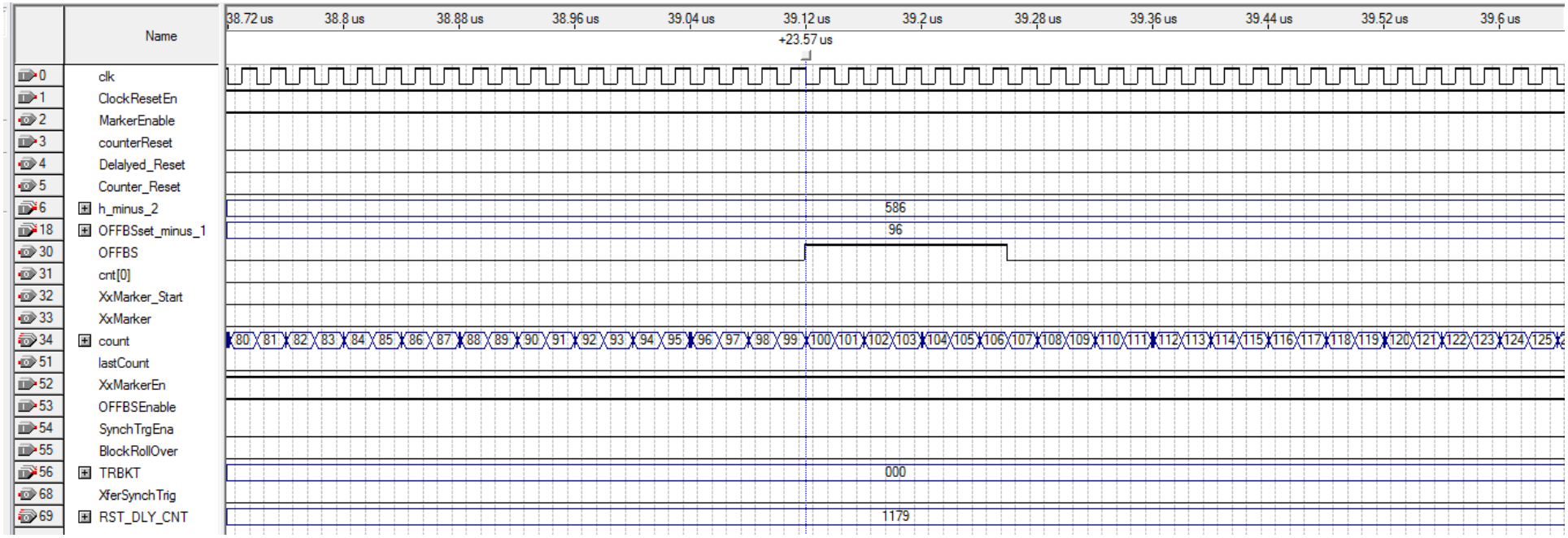
Name
38.72 us
38.8 us
38.88 us
38.96 us
39.04 us
39.12 us
39.2 us
39.28 us
39.36 us
39.44 us
39.52 us
39.6 us
+23.57 us
0 clk
1 ClockResetEn
2 MarkerEnable
3 counterReset
4 Delayed_Reset
5 Counter_Reset
6 h_minus_2
586
18 OFFBSset_minus_1
96
30 OFFBS
31 cnt[0]
32 XxMarker_Start
33 XxMarker
34 count
51 lastCount
52 XxMarkerEn
53 OFFBSEnable
54 SynchTrgEna
55 BlockRollOver
56 TRBKT
000
68 XferSynchTrig
69 RST_DLY_CNT
1179

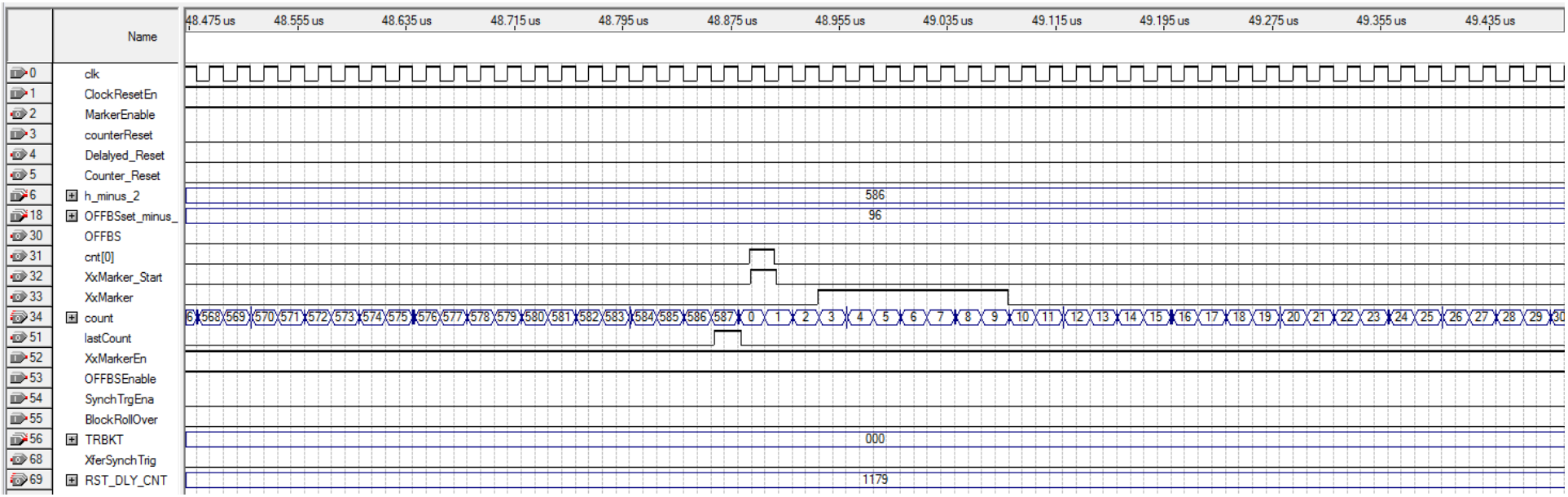
Name
48.475 us
48.555 us
48.635 us
48.715 us
48.795 us
48.875 us
48.955 us
49.035 us
49.115 us
49.195 us
49.275 us
49.355 us
49.435 us
clk
ClockResetEn
MarkerEnable
counterReset
Delayed_Reset
Counter_Reset
h_minus_2
586
OFFBSset_minus_
96
OFFBS
cnt[0]
XxMarker_Start
XxMarker
count
lastCount
XxMarkerEn
OFFBSEnable
SynchTrgEna
BlockRollOver
TRBKT
000
XferSynchTrig
RST_DLY_CNT
1179

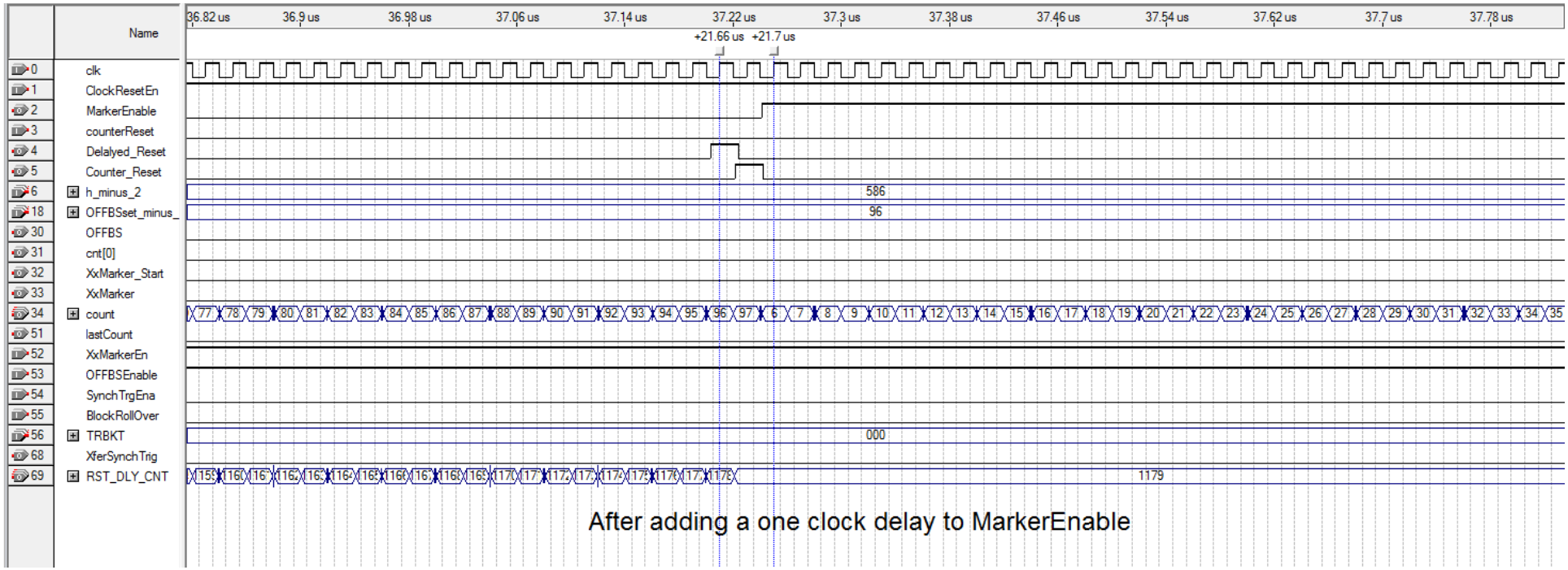
Name
36.82 us
36.9 us
36.98 us
37.06 us
37.14 us
37.22 us
37.3 us
37.38 us
37.46 us
37.54 us
37.62 us
37.7 us
37.78 us
+21.66 us
+21.7 us
clk
ClockResetEn
MarkerEnable
counterReset
Delayed_Reset
Counter_Reset
h_minus_2
586
OFFBSset_minus_
96
OFFBS
cnt[0]
XxMarker_Start
XxMarker
count
lastCount
XxMarkerEn
OFFBSEnable
SynchTrgEna
BlockRollOver
TRBKT
000
XferSynchTrig
RST_DLY_CNT
1179
After adding a one clock delay to MarkerEnable