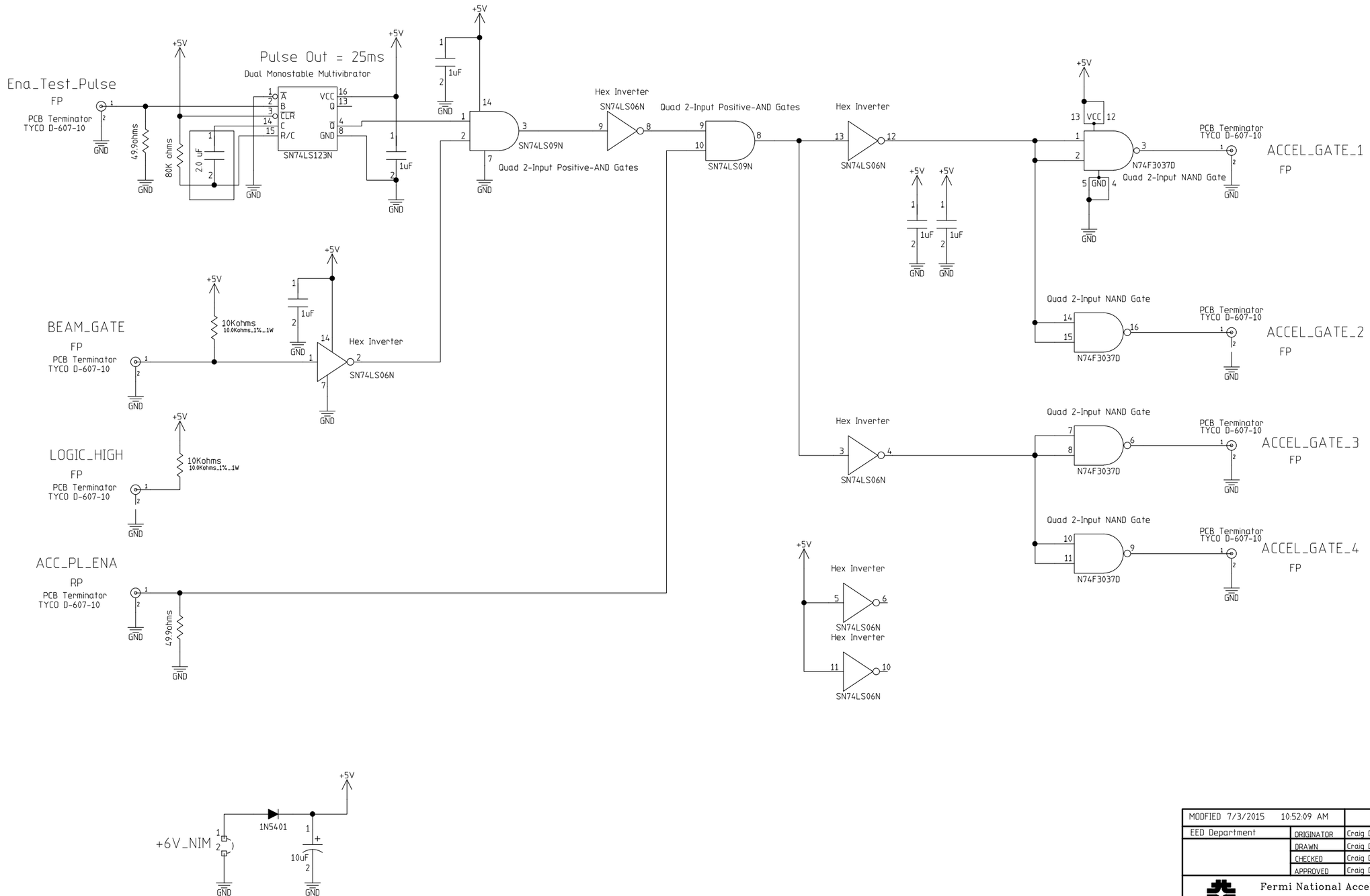

MODFIED 7/3/2015 10:52:09 AM			
EED Department	ORIGINATOR	Craig Drennan	DATE 02.2013
	DRAWN	Craig Drennan	DATE 02.2013
	CHECKED	Craig Drennan	DATE 02.2013
	APPROVED	Craig Drennan	DATE 02.2013

Fermi National Accelerator Laboratory
United States Department of Energy

Z:\JOBS\Accel Enable Gate Logic\Accel Enable Gate Logic.prj

BOOSTER LLRF ACCELERATION GATE MODULE

SIZE	DRAWING NUMBER	REV
D	0000-ED-xxxxxx (Schematic Page 01 of 02)	A

H=8ND; V=4LA