Fermilab

Managed by Fermi Research Alliance, LLC for the U.S. Department of Energy Office of Science

More power coupler results

Gennady Romanov

2nd Harmonic cavity Meeting

15/X-2015

Concern about C_tube

2ndHarm_ES_TanTube_Short_2

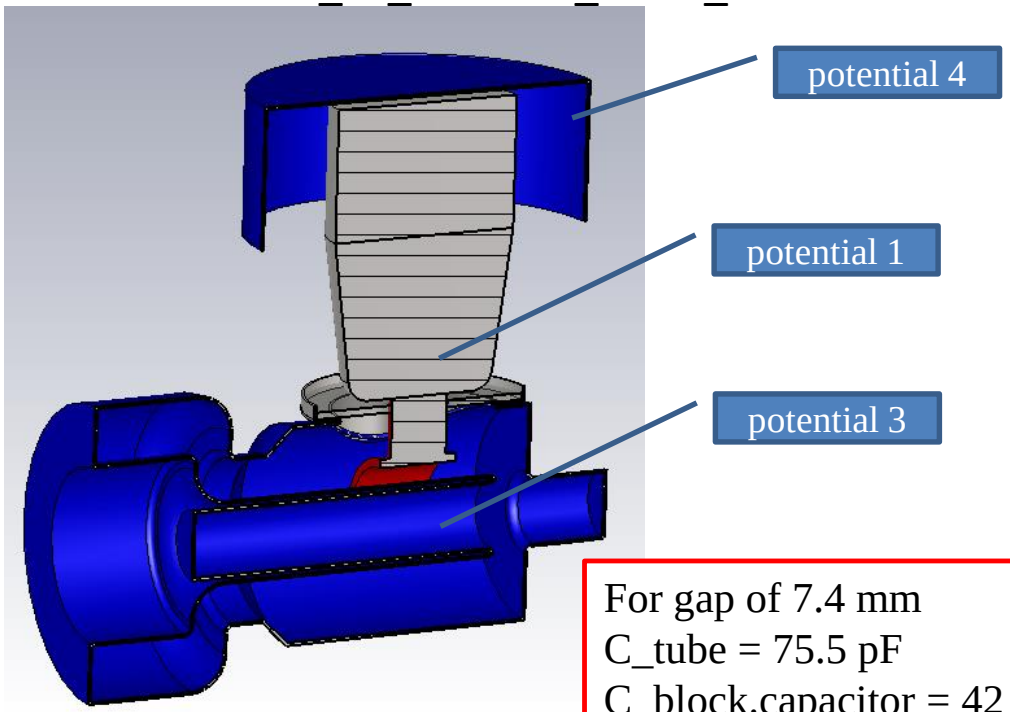

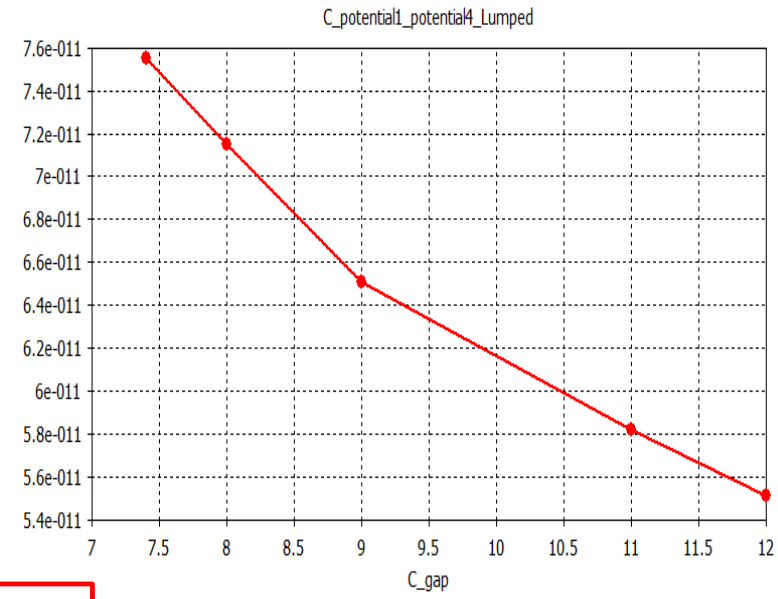

For gap of 7.4 mm
C_tube = 75.5 pF
C_block.capacitor = 42 pF

```
Capacitance Matrix (lumped):

----------------------------------------------------------------------

                    potential1        potential3        potential4

potential1          5.472499e-012 F   4.233643e-011 F   7.549259e-011 F
potential3          4.233643e-011 F   1.458605e-010 F   1.153304e-012 F
potential4          7.549259e-011 F   1.153304e-012 F   1.758627e-010 F

----------------------------------------------------------------------
```

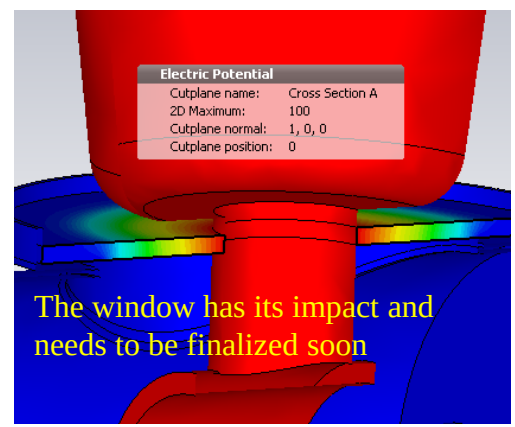

C_tube in TRIUMF cavity

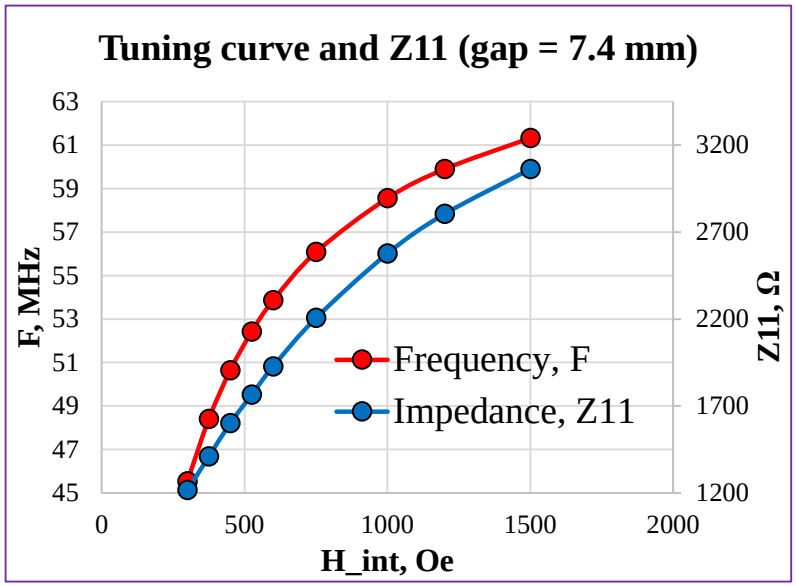

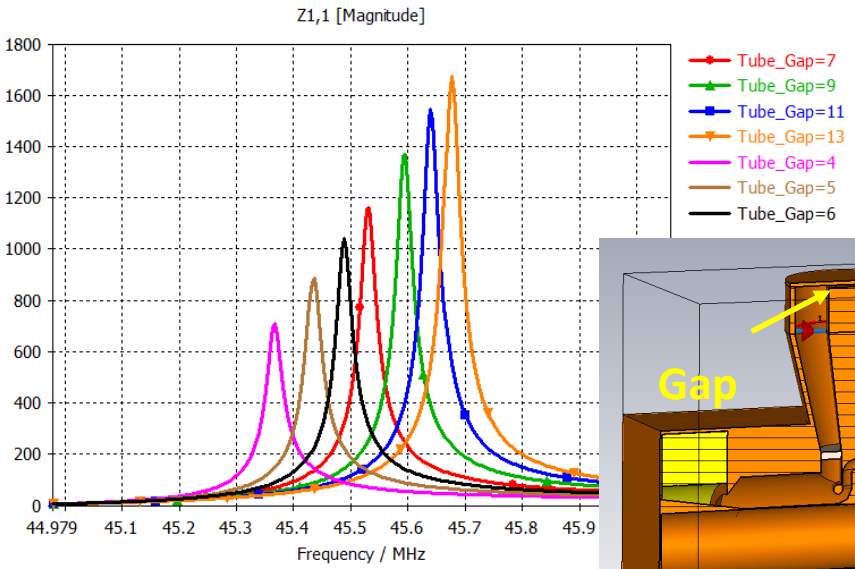

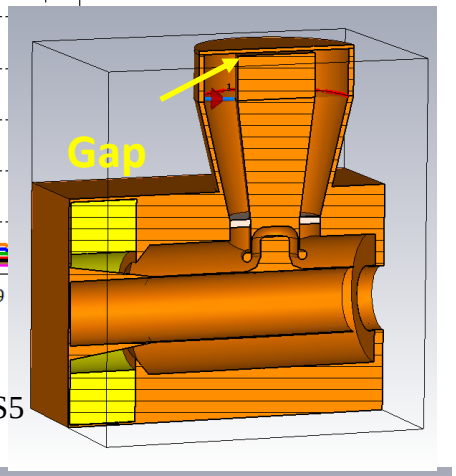

TRIUMF_Transformer, TS5

40 pF;

58 pF with window

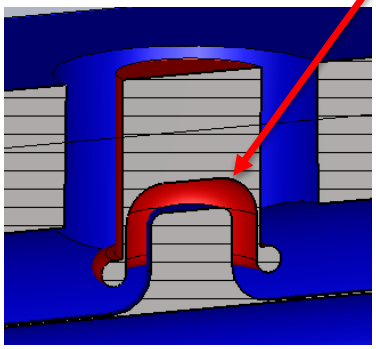

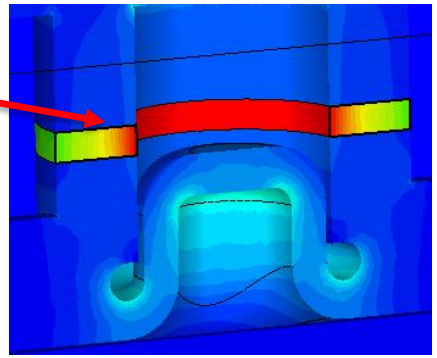

Model2_FD_ES, TS4

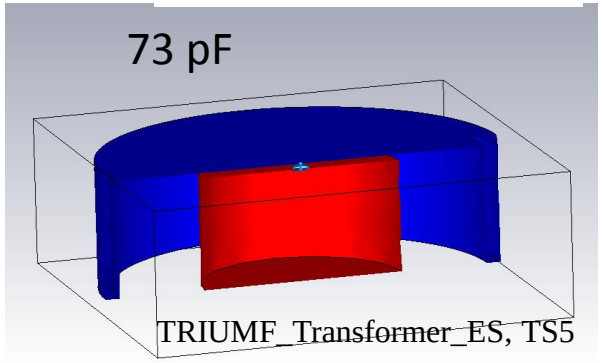

TRIUMF_Transformer_ES, TS5

What next

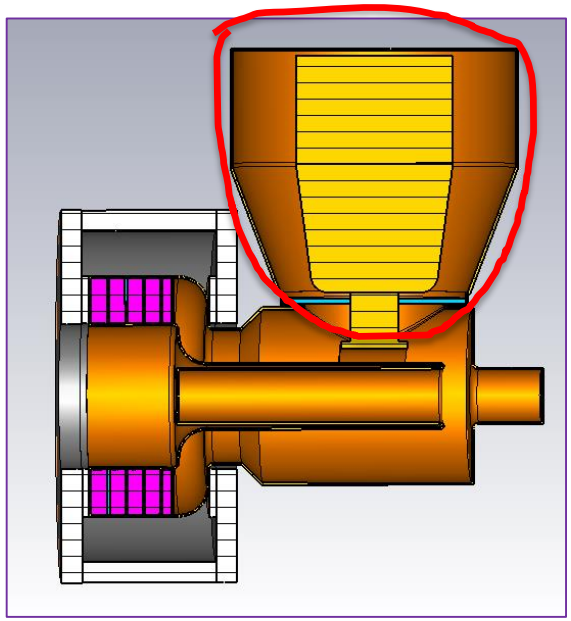

Mechanical design – what is needed first

- Window
- Tube housing
- Outer shell
- Port

HOM coupler model is built based on SuperFish geometry from Tan

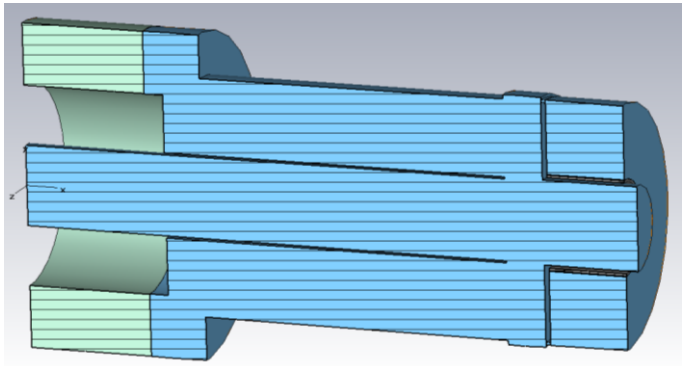

- Check SuperFish model
- Incorporate HOM coupler in the CST model
- Develop approach: PIC solver? Wakefield solver? FD solver?