Fermilab

Managed by Fermi Research Alliance, LLC for the U.S. Department of Energy Office of Science

Input impedance

Gennady Romanov

2nd Harmonic cavity Meeting

8/X-2015

Changes to get required impedance

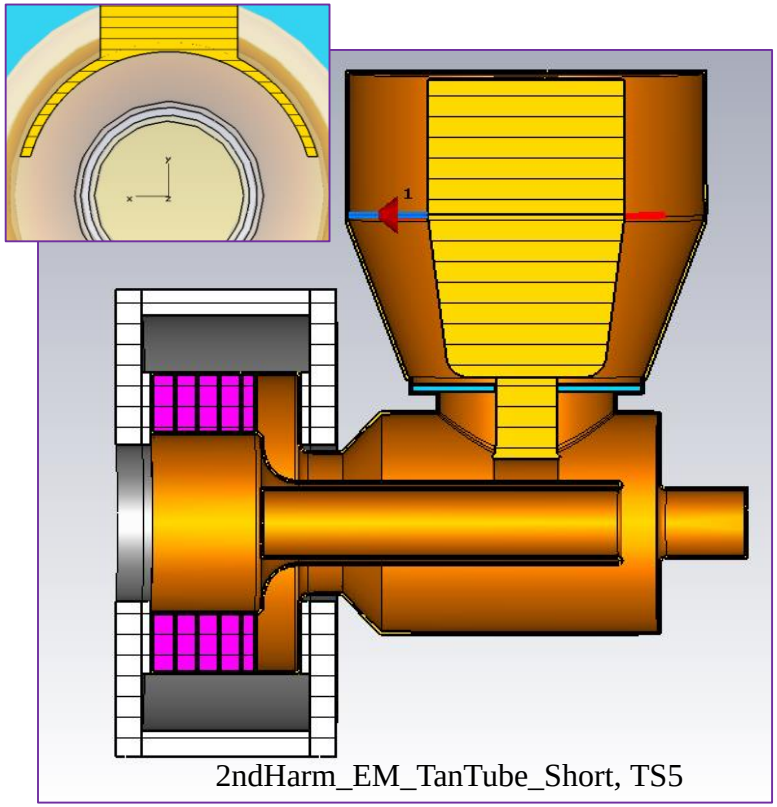

2ndHarm_EM_TanTube_Short, TS5

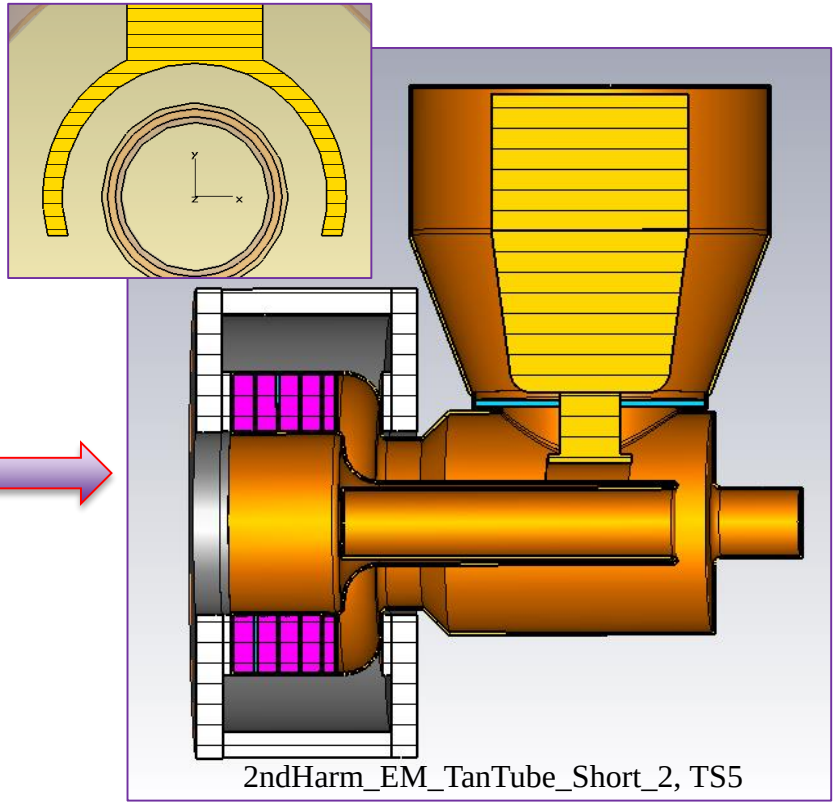

2ndHarm_EM_TanTube_Short_2, TS5

The changes were made to increase impedance and keep frequency range intact at the same time.

- Gap of blocking capacitance 25.4 mm -> 20 mm
- Length of blocking capacitance 85 mm -> 95 mm
- Length of coaxial part of the cavity 450 mm -> 420 mm
- Diameter of the neck 90 mm -> 105 mm
- Capacitance > ½ of full circle (≈ 160° -> ≈200°)
- And other minor changes that can be tracked in the model

Tuning curve

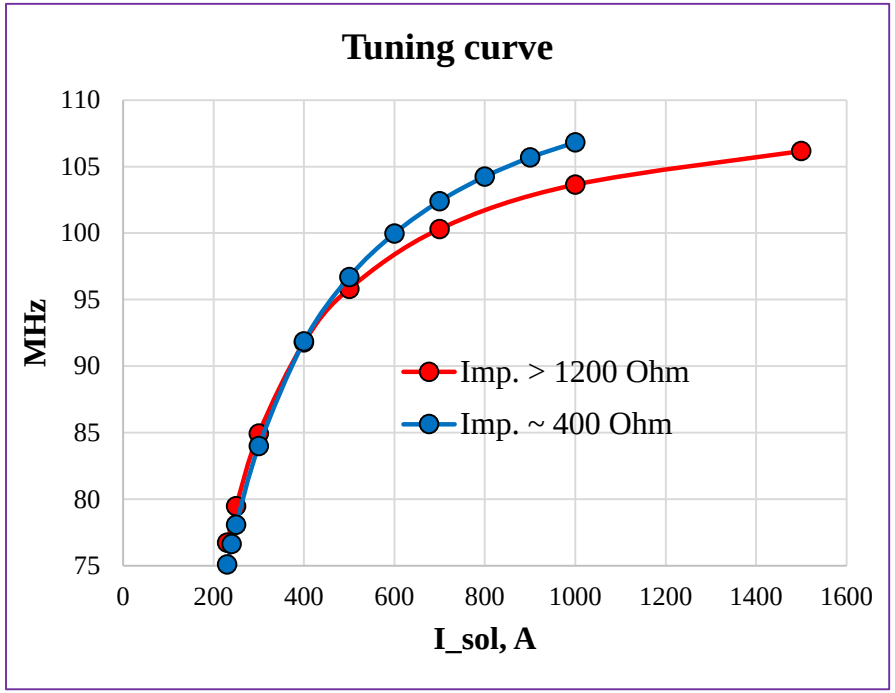

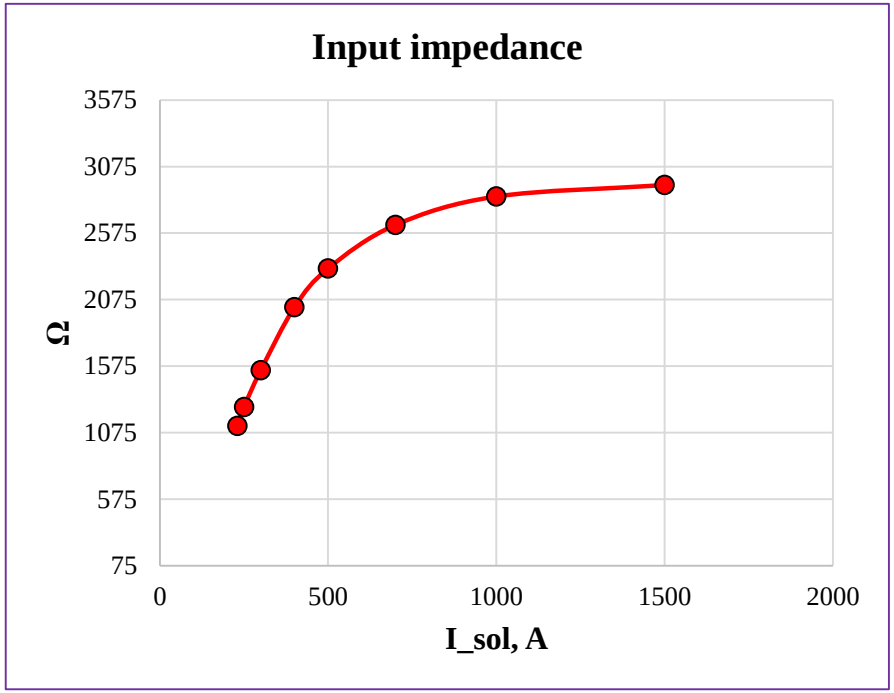

Tuning effectiveness (dF/dI_sol) has dropped.

Thermal losses

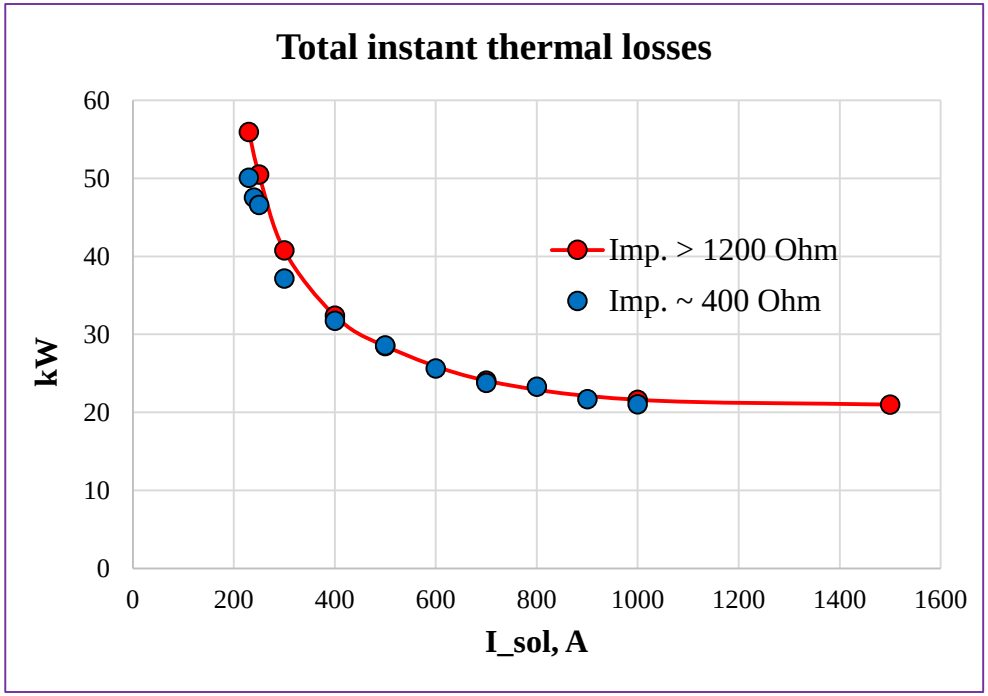

Losses are the same. So, so far only one drawback is apparent - much stronger bias field is required for given tuning range.