DESCRIPTION: FERRITE TUNER EXTRUDED BUS ASSEMBLY
CATEGORY: PROJECT: BOOSTERBeamlineDevices

REV	REVISION CONTROL DOCUMENT	DATES	SIGNATURES	
A	F00496038-A-RCD		DRAWN	S.OPLT
			APPROVED	

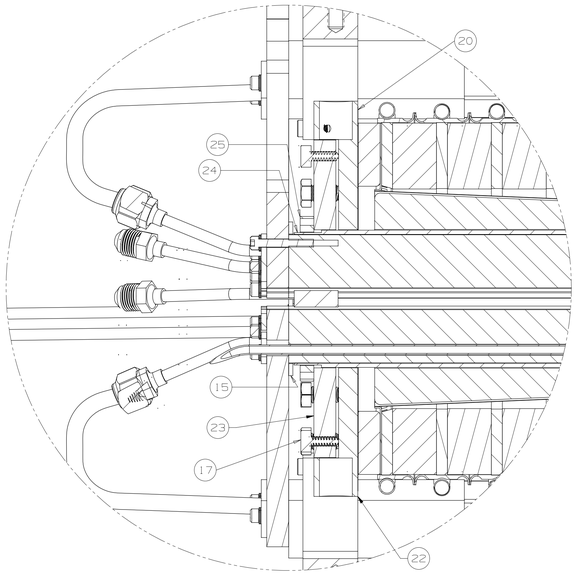

SCALE 3:4
DETAIL C

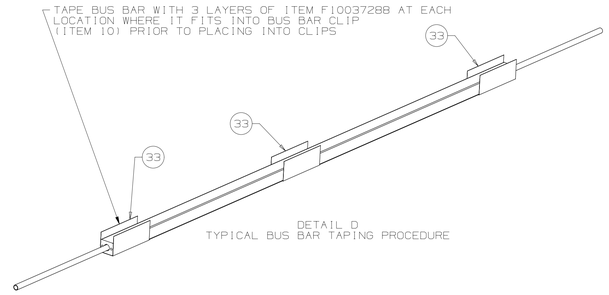

DETAIL D
TYPICAL BUS BAR TAPING PROCEDURE

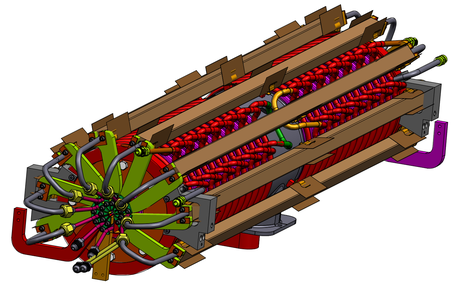

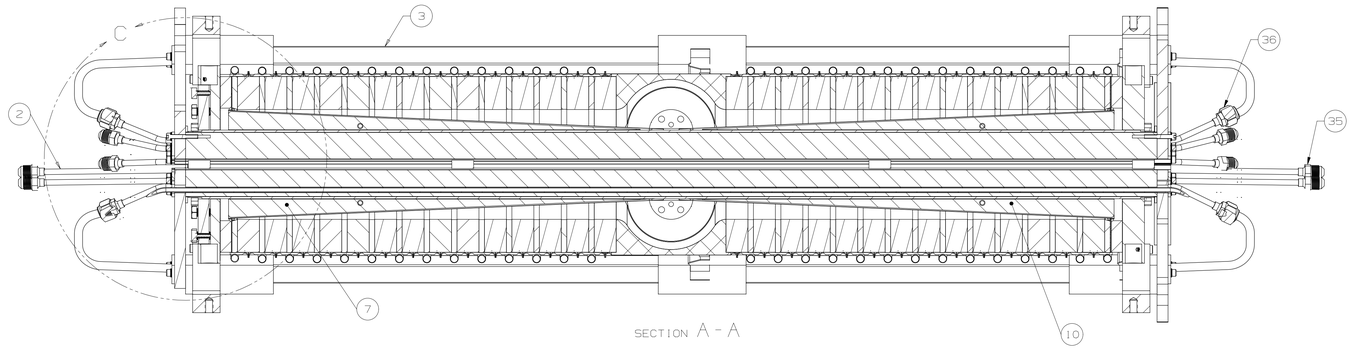

SECTION A - A

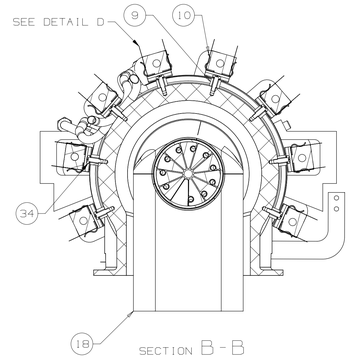

SECTION B - B

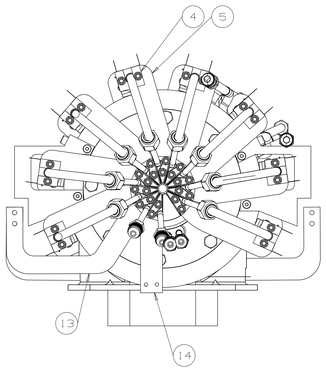

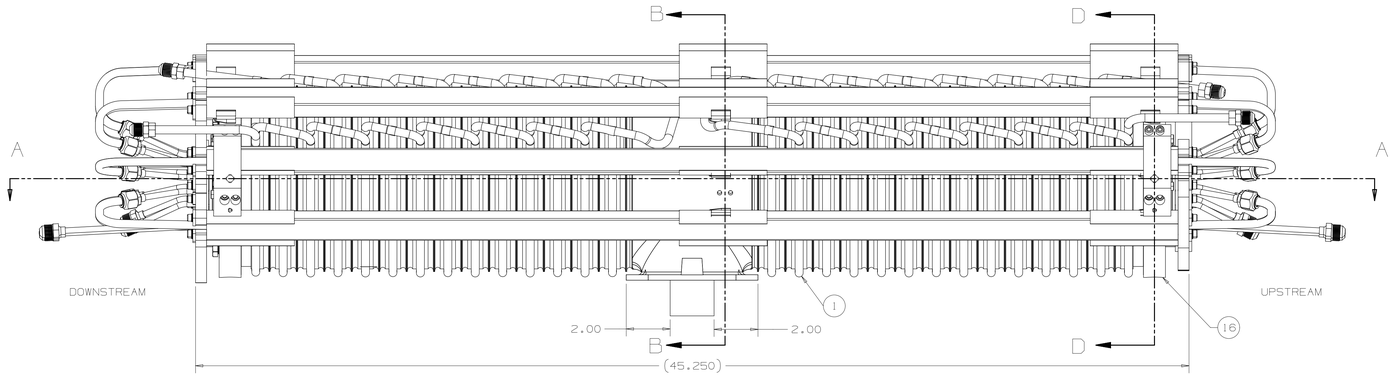

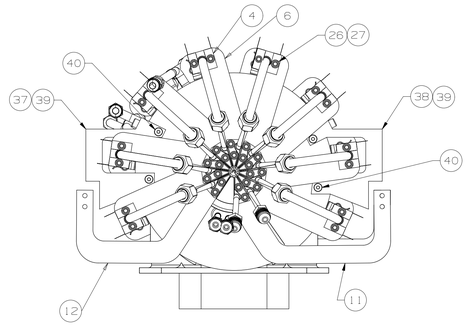

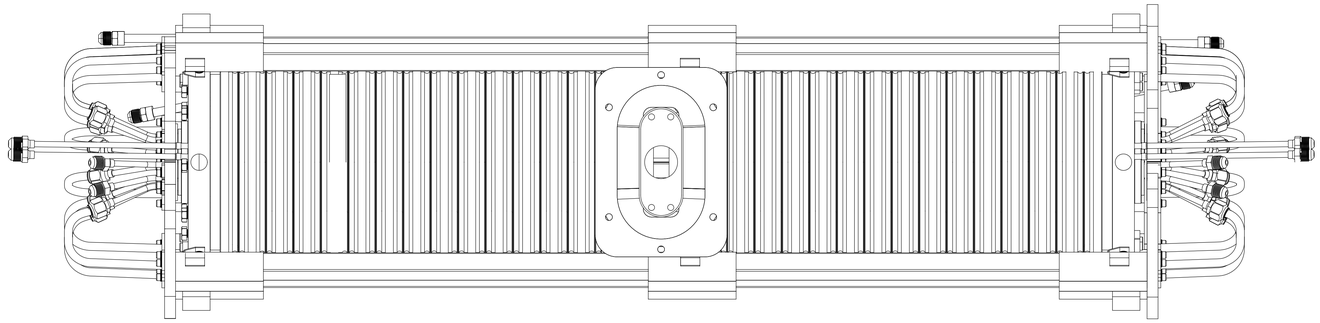

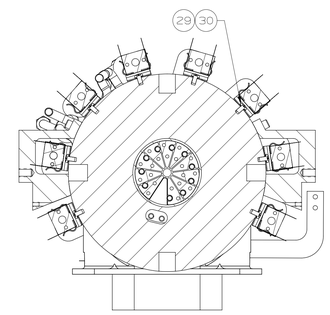

SECTION D - D

ITEM	PART NUMBER	PART NAME	QTY
40	FC0050856	SHOULDER BOLT .250x.312Lx10-32 18-8 SS	8
39	FC0003345	SHCS,1/4-20x0.75LGxFT,SS18-8	16
38	F10038587	BOOSTER RF CAVITY TUNER HOIST POINT B	2
37	F10037495	BOOSTER RF CAVITY TUNER HOIST POINT A	2
36	FC0050458	TUBE 45 DEG FLARE NUT 3/8, SHORT	16
35	FC0050457	TUBE FITTING ADAPTER 3/8 TO 1/4, MALE 45 DEG FLARE TO SOLDER	4
34	FC0019146	PHMS-PH,10-32x0.625LGxFT,SS18-8	8
33	F10037288	KAPTON TAPE, 4 X 4	72
32	F10037222	KAPTON TAPE, CONNECTING BUS SPACER	18
31	FC0049426	KAPTON, .002" THK x 1" WIDE ROLL, ADHESIVE	AS REQD
30	FC0050407	WASHER, INTERNAL-TOOTH LOCK, #10, 18-8 SS	24
29	FC0019142	PHMS-PH,10-32x0.375LGxFT, SS18-8	16
28	FC0003310	SHCS,10-32x0.5LGxFT:18-8 STAINLESS STEEL	2
27	F09009951	BELLEVILLE WASHER 375 OD 195 ID	144
26	FC0003317	SHCS,10-32x1.25LGx0.875T:18-8 STAINLESS STEEL	80

ITEM	PART NUMBER	PART NAME	QTY
25	F00394826	BOOSTER FERRITE TUNER END LOCK NUT	2
24	F00394871	STAINLESS STEEL CENTER TUBE	1
23	F00394836	TENSION PLATE	1
22	F00394835-A	SUPPORT FLANGE	1
21	F00394825-A	BOOSTER FERRITE TUNER ALIGNMENT PIN	8
20	F00394831-A	KAPTON WASHER	4
19	F00394834	STAINLESS STEEL SPACER	2
18	F00394639-A	BOOSTER RADIO FREQUENCY CAVITY TUNER CONE STEM	1
17	FC0008559	HHCS, 3/8-16x0.625LGxFT, SS18-8	8
16	F00394824	BLANK SUPPORT FLANGE	1
15	F00394811	BOOSTER FERRITE TUNER INSULATING WASHER	2
14	F00394852	SHORT INNER CONNECTING BUS BAR	1
13	F00394853-A	FRONT CONNECTING BUS BAR LONG	1
12	F00394855	REAR CONNECTING BUS BAR LONG	1
11	F00394856	REAR CONNECTING BUS BAR LG LEFT	1
10	F00394829-A	BUS BAR CLIP	24
9	F00394857-A	BUS BAR STANDOFF	8
8	F00394867	INNER BUS BAR WASHER	20
7	F00496031-A	BOOSTER RF SYSTEM TUNER FINAL CONE ASSEMBLY	2
6	F00394933	EXTRUDED REAR CONNECTING SHORT	8
5	F00394932	EXTRUDED FRONT CONNECTING SHORT	8
4	F00394868	OUTER EXTRUDED BUS BAR WASHER	16
3	F00394940-B	EXTRUDED OUTER BUS BRAZE	8
2	F00496030-C	INNER PACKAGE ASSY	2
1	F00496037-A	BOOSTER RF CAVITY FERRITE TUNER SHELL ASSY	1

UNLESS OTHERWISE SPECIFIED

±.X	±.XX	±.XXX	±X/X	±X°
.1	.02	.005	1/16	.2°

BREAK ALL SHARP EDGES .015 MAX.
DO NOT SCALE DRAWING
DIMENSIONS BASED ON ASME Y14.5M-1994
MAX. ALL MACH SURFACES 125
DRAWING UNITS: INCHES

DRAWN	S.OPLT	DATE	
CHECKED		DATE	
APPROVED		DATE	
USED ON			
MATERIAL			

GROUP: Accelerator Mechanical Support | CAGE CODE: 0U5R6

FERMI NATIONAL ACCELERATOR LABORATORY
UNITED STATES DEPARTMENT OF ENERGY

NAME: BOOSTER RF SYSTEM FERRITE TUNER COMMON ASSEMBLY-MARK IV

SCALE	SIZE	DRAWING NUMBER	SHEET	REV
	E	F00496038	1 OF 3	A

DESCRIPTION: FERRITE TUNER EXTRUDED BUS ASSEMBLY
CATEGORY1 PROJECT: BOOSTERBeamlineDevices

REV	REVISION CONTROL DOCUMENT	DATES	SIGNATURES	
A	F00496038-A-RCD		DRAWN	S.OPLT
			APPROVED	

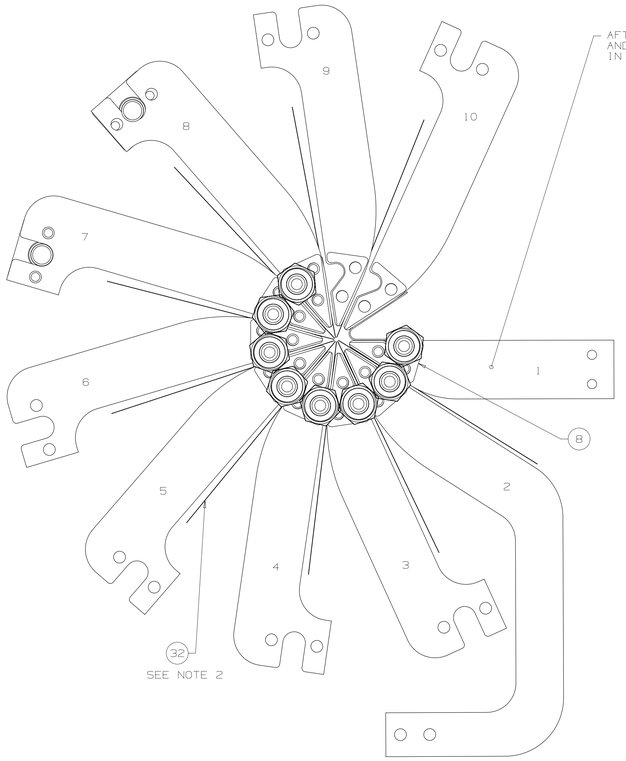

DOWNSTREAM VIEW
(SOME PARTS OMITTED FROM VIEW FOR CLARITY)

AFTER ASSEMBLY AND BEGINNING AT THESE LOCATIONS AND MOVING CLOCKWISE, LABEL EACH CONNECTING BUS IN SEQUENCE 1-10(DOWNSTREAM END) AND 11-20 (UPSTREAM END)

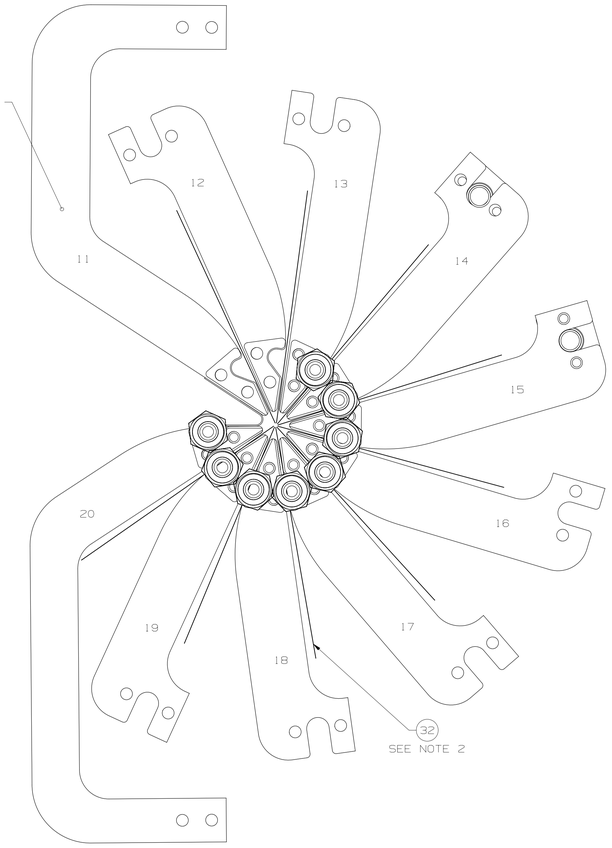

UPSTREAM VIEW
(SOME PARTS OMITTED FROM VIEW FOR CLARITY)

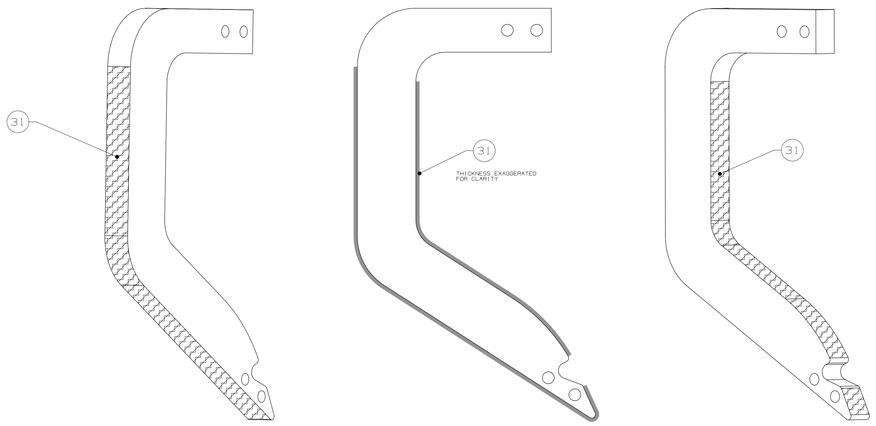

TYPICAL TAPING OF CONNECTING BUS
SEE NOTE 1

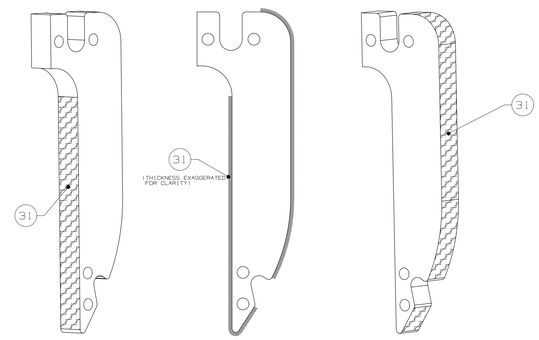

TYPICAL TAPING OF CONNECTING BUS
SEE NOTE 1

NOTES:

1. TAPE SURFACES OF CONNECTING BUS BAR AS SHOWN USING FC0049426 1" TAPE AND TRIM OFF EXCESS MATERIAL

2. INSERT ONE PIECE OF KAPTON (F10037222) 3/4" X 4" LONG X .005" THK BETWEEN EACH CONNECTING BAR

UNLESS OTHERWISE SPECIFIED				
±.X	±.XX	±.XXX	±X/X	±X°
.1	.02	.005	1/16	.2°

BREAK ALL SHARP EDGES .015 MAX.
DO NOT SCALE DRAWING
DIMENSIONS BASED ON ASME Y14.5M-1994
MAX. ALL MACH SURFACES 125
DRAWING UNITS: INCHES

DRAWN	S.OPLT	DATE	
CHECKED		DATE	
APPROVED		DATE	

USED ON

MATERIAL

GROUP: Accelerator Mechanical Support CAGE CODE: 0U5R6

FERMI NATIONAL ACCELERATOR LABORATORY
UNITED STATES DEPARTMENT OF ENERGY

NAME
BOOSTER RF SYSTEM FERRITE TUNER COMMON ASSEMBLY-MARK IV

SCALE	SIZE	DRAWING NUMBER	SHEET	REV
	E	F00496038	2 OF 3	A

DESCRIPTION: FERRITE TUNER EXTRUDED BUS ASSEMBLY
CATEGORY1: PROJECT1: BOOSTERBeamlineDevices

REV	REVISION CONTROL DOCUMENT	DATES	SIGNATURES	
A	F00496038-A-RCD		DRAWN	S.OPLT
			APPROVED	S.OPLT

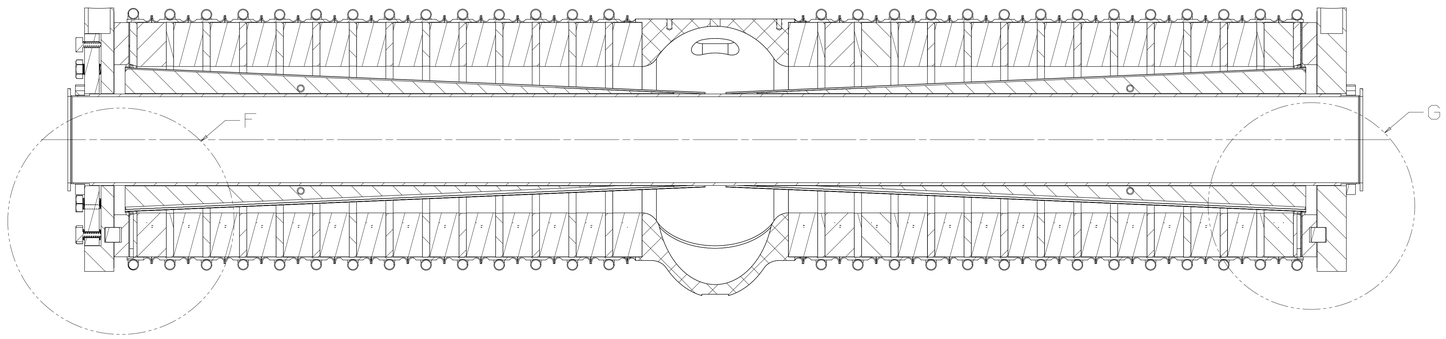

SECTION E-E

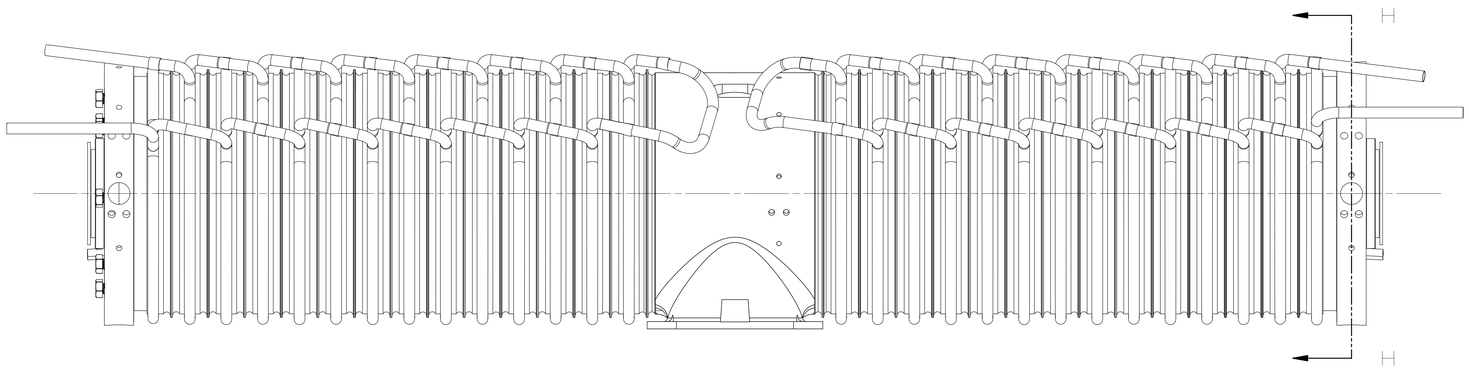

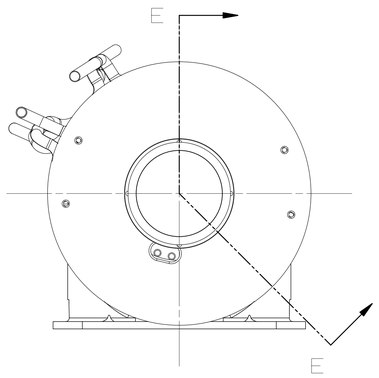

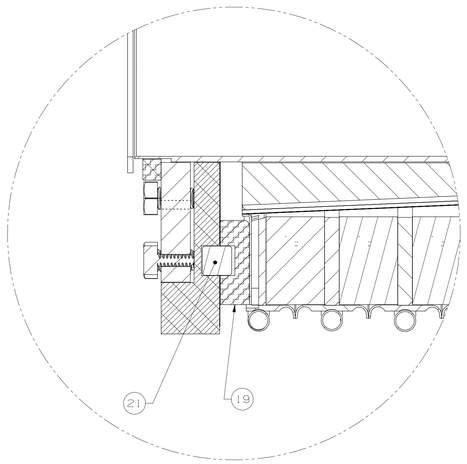

DETAIL F
SCALE 1:1

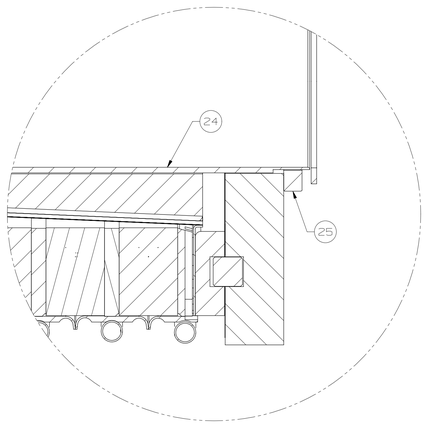

DETAIL G
SCALE 1:1

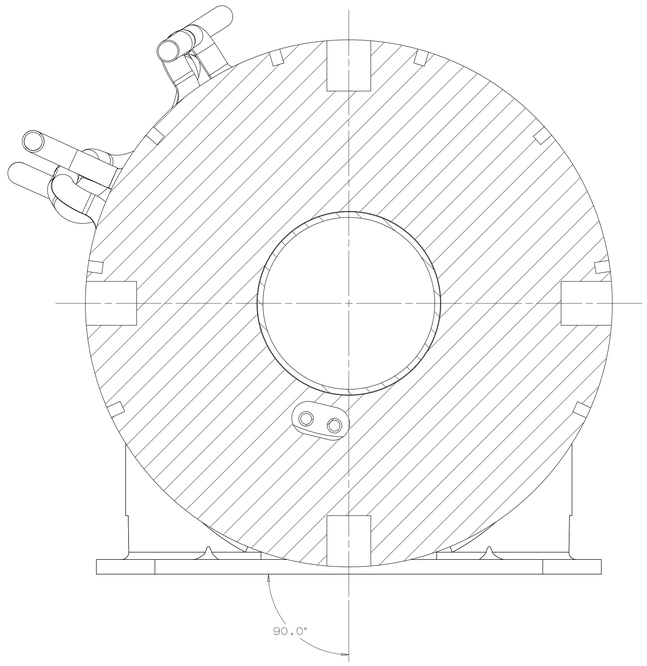

SECTION H-H

UNLESS OTHERWISE SPECIFIED				
±.X	±.XX	±.XXX	±X/X	±X°
.1	.02	.005	1/16	.2°

BREAK ALL SHARP EDGES .015 MAX.
DO NOT SCALE DRAWING
DIMENSIONS BASED ON ASME Y14.5M-1994
MAX. ALL MACH SURFACES 125
DRAWING UNITS: INCHES

DRAWN	S.OPLT	DATE	
CHECKED	S.OPLT	DATE	
APPROVED	S.OPLT	DATE	
USED ON			
MATERIAL			
GROUP: Accelerator Mechanical Support		CAGE CODE: 0U5R6	

FERMI NATIONAL ACCELERATOR LABORATORY
UNITED STATES DEPARTMENT OF ENERGY

NAME
BOOSTER RF SYSTEM FERRITE TUNER COMMON ASSEMBLY-MARK IV

SCALE	SIZE	DRAWING NUMBER	SHEET	REV
	E	F00496038	3 OF 3	A