Fermilab

Managed by Fermi Research Alliance, LLC for the U.S. Department of Energy Office of Science

Garnet test setup cavity.

Gennady Romanov

2nd Harmonic cavity meeting

August 6, 2017

Garnet test setup cavity, empty

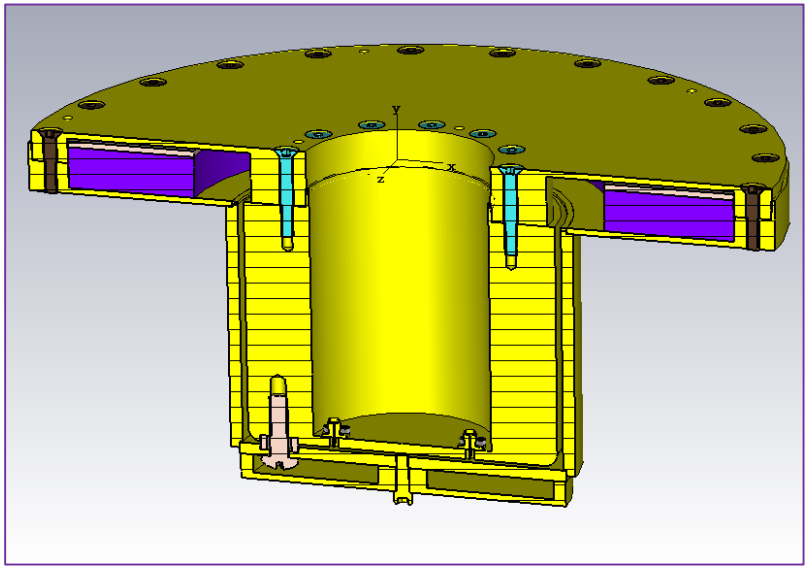

Design parameters:
Empty cavity frequency - 135.72 MHz, Q = 2190

Step	F, MHz	Q
Unbolted, lacquer	132.93	-
Lacquer	136.49	220
Lacquer removed	138.83	1400
With yoke	138.7	1100-1400

Correction of frequency and Q of empty cavity

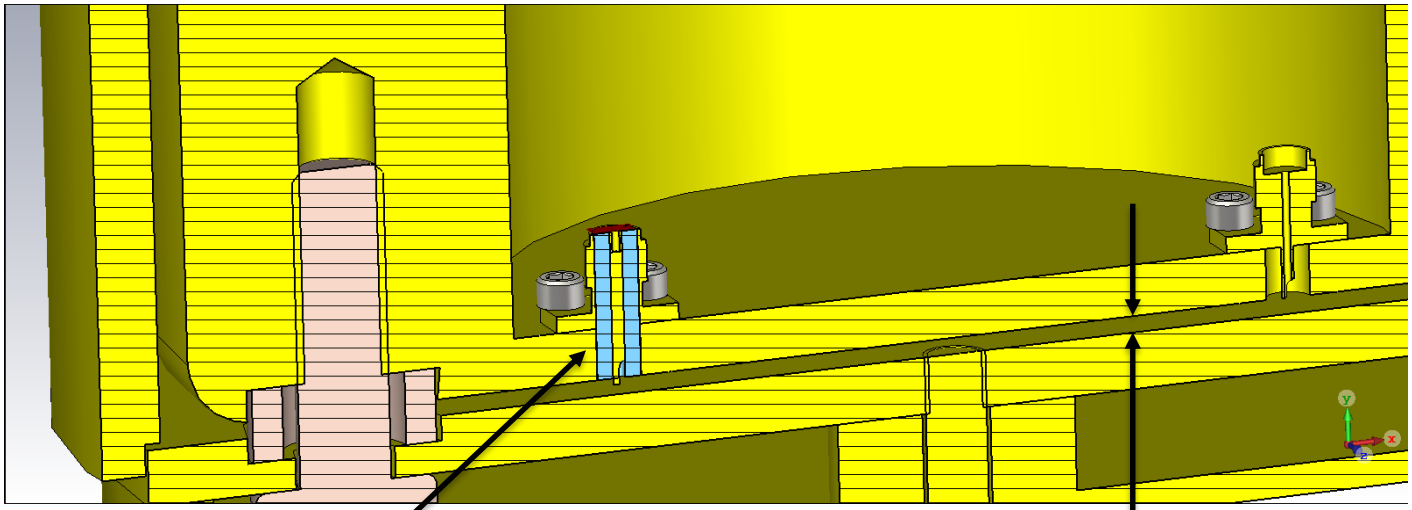

One of the dummy feedthroughs turned to "real" coaxial port, coupling ~ 0.0001

Gap increased by 0.005"

Conductivity of the copper decreased from 5.8e7 S to 2.3e7 S

F = 138.55 MHz

Q = 1398

Materials

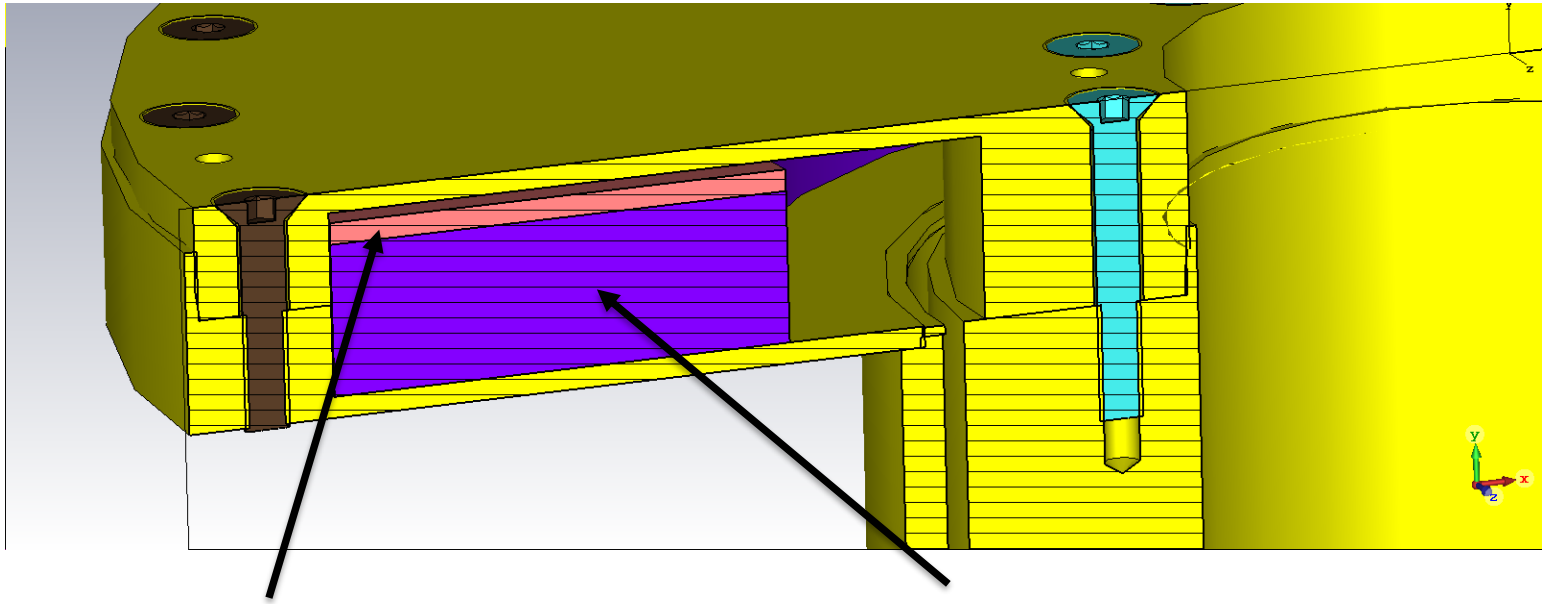

Alumina 99.5%

$\varepsilon = 9.9$

$\mu = 1$

$\tan\delta_{el} = 0.0001$ (const)

Garnet

$\varepsilon = 14.4$

$\tan\delta_{el} = 0.0001$

$\alpha = 0.003573$ (const)

H_sat = 800 G

Resonance line width = 24 Oe

Results

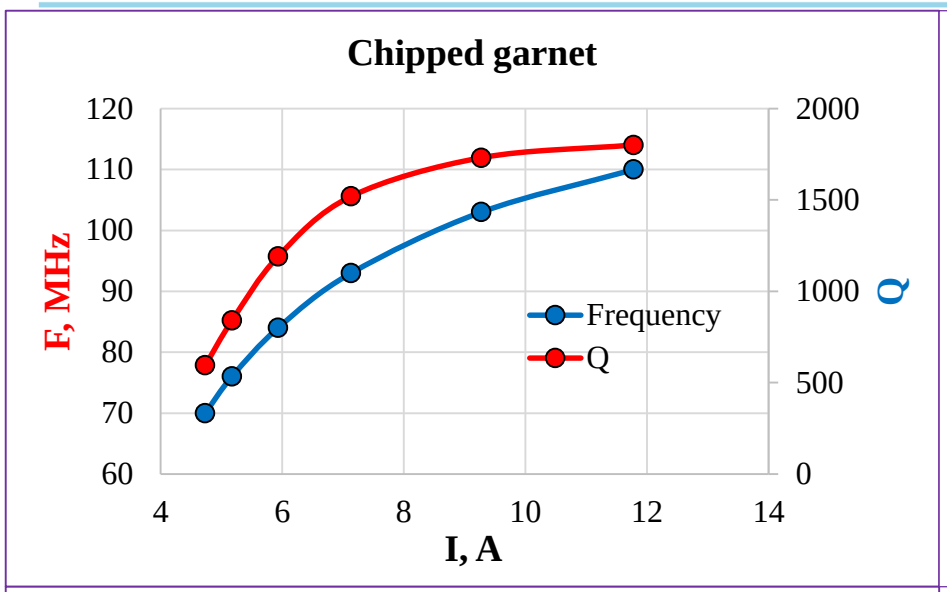

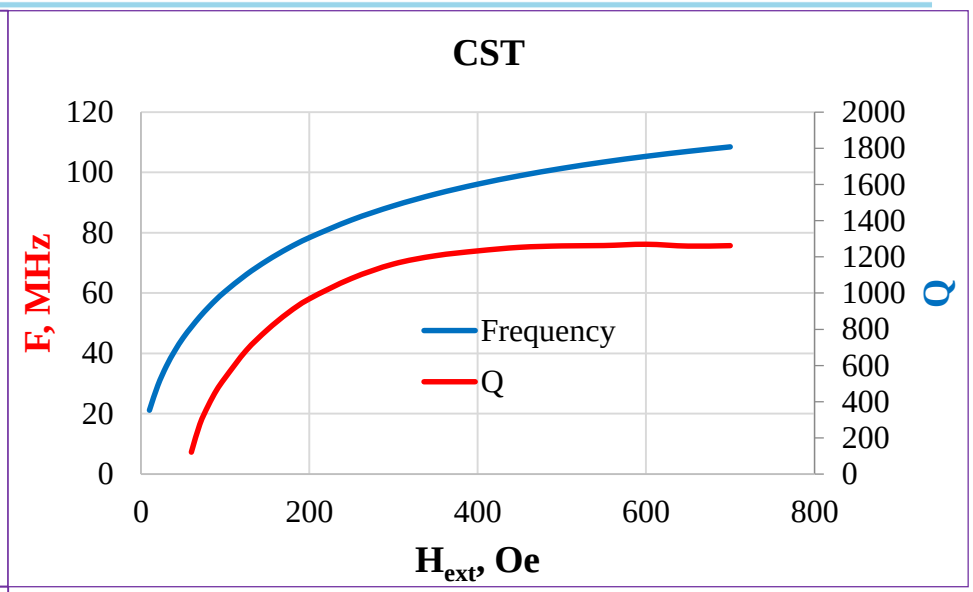

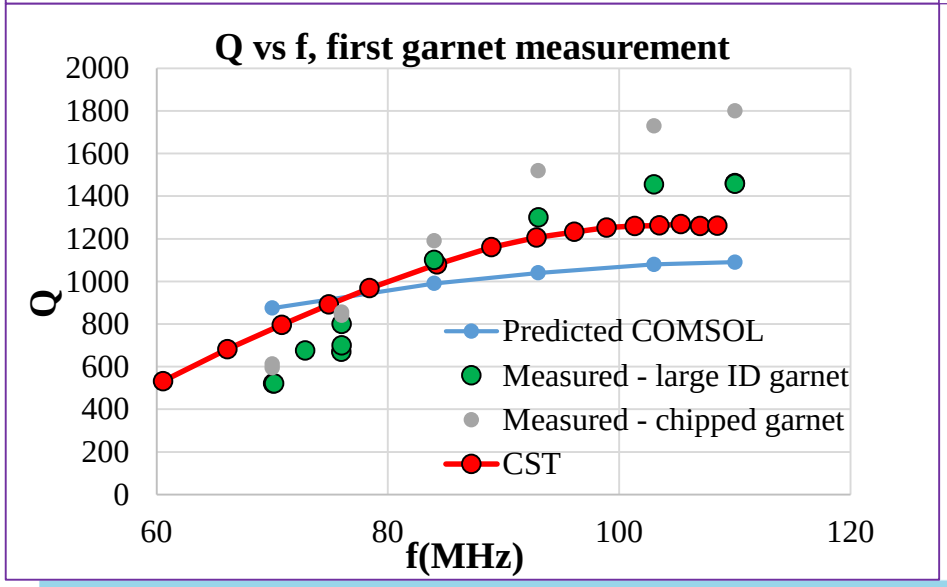

Q at f>110 MHz greater Q_{empty} ??
α is not constant? It could explain shape, but not this ratio.

$$Q = \omega \frac{W}{P} \propto \frac{W_{V-V_{garnet}} + W_{V_{garnet}} \xrightarrow{\mu' \to 1}}{P_{surface,copper} + P_{V_{garnet}} \xrightarrow[\mu'' \to 0]{}} \Rightarrow \frac{W_V}{P_{surface,copper}} ?$$