Fermilab

Managed by Fermi Research Alliance, LLC for the U.S. Department of Energy Office of Science

The test set-up with small garnet disks.

Gennady Romanov

2nd Harmonic cavity meeting

October 12, 2017

Garnet disk set-up with small disks, Q

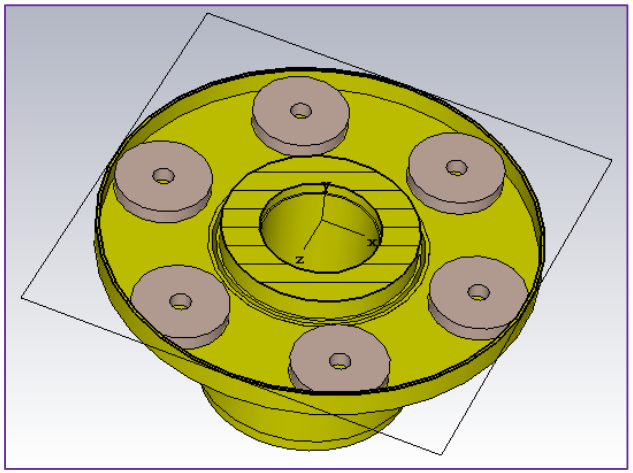

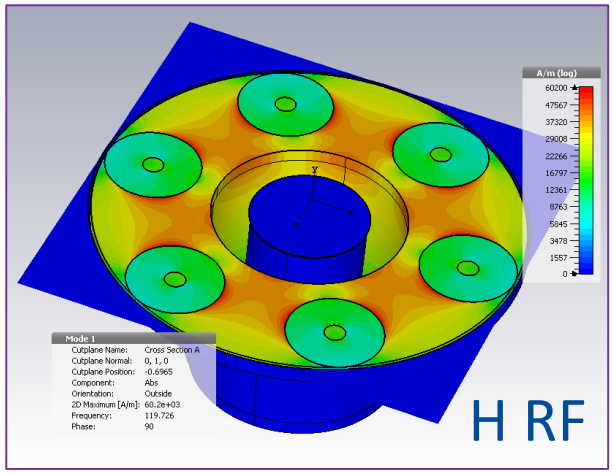

"Rough" copper – 3.2e7 S/m
Normal copper – 5.8e7 S/m
Garnet μ″ from chipped garnet tests.

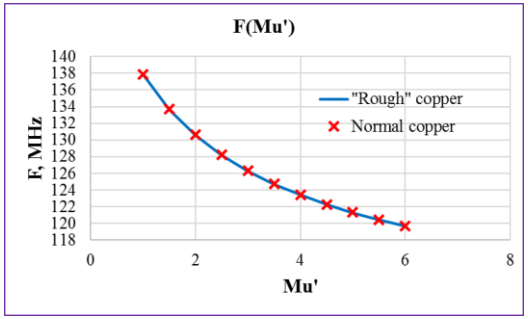

OD=3"; ID=0.65";T=0.5"

Q_exp = 800-1200 at μ' = 4.5 (without gasket)

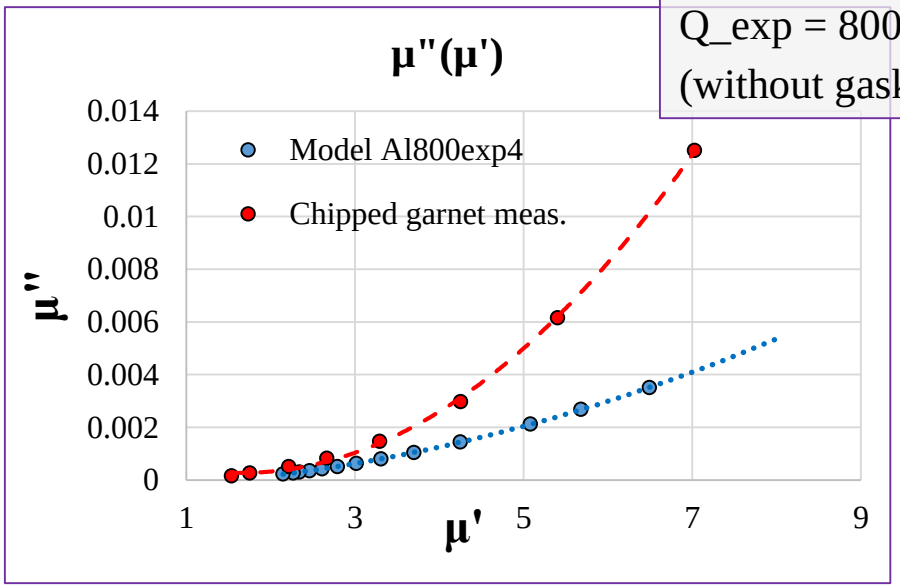

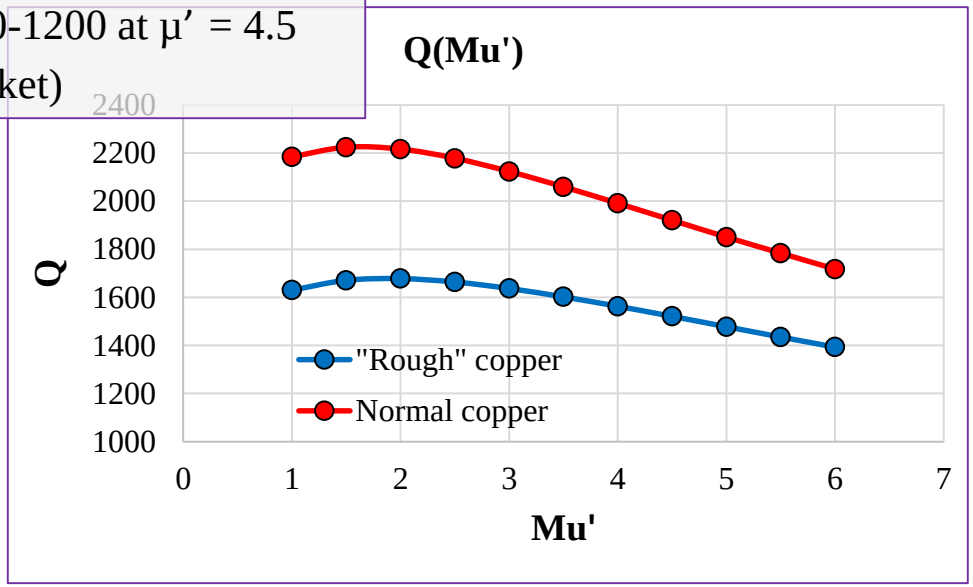

Garnet disk set-up with small disks, Q
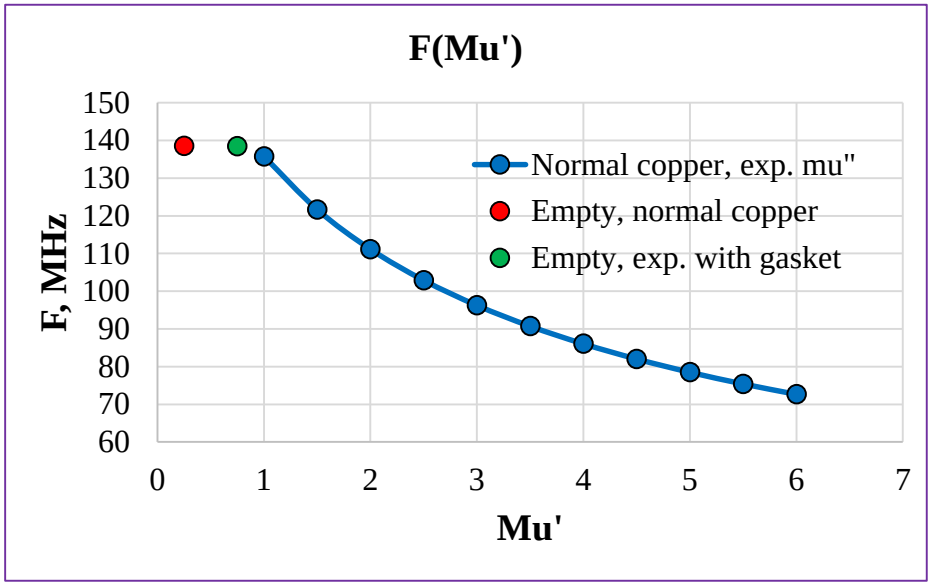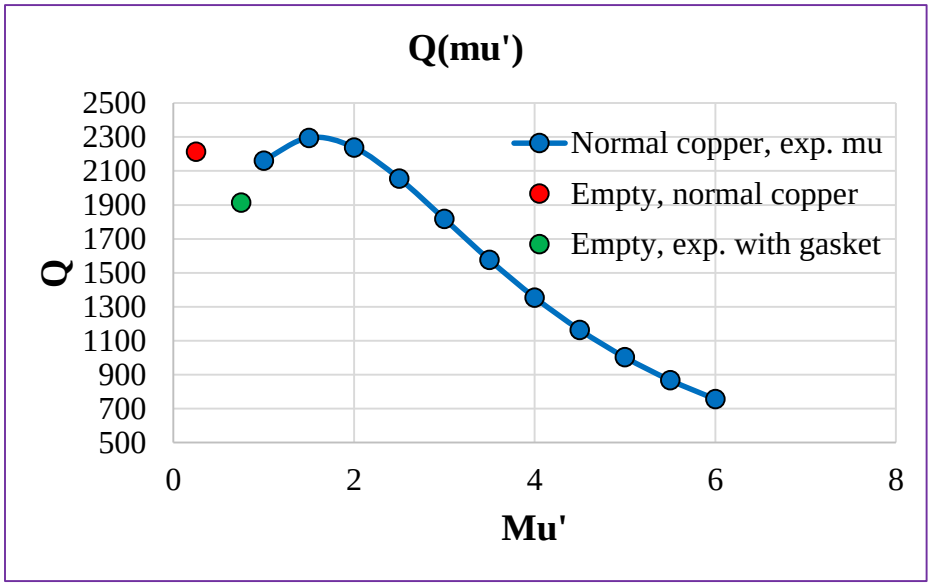
Normal copper – 5.8e7 S/m
Garnet μ″ from chipped garnet tests.