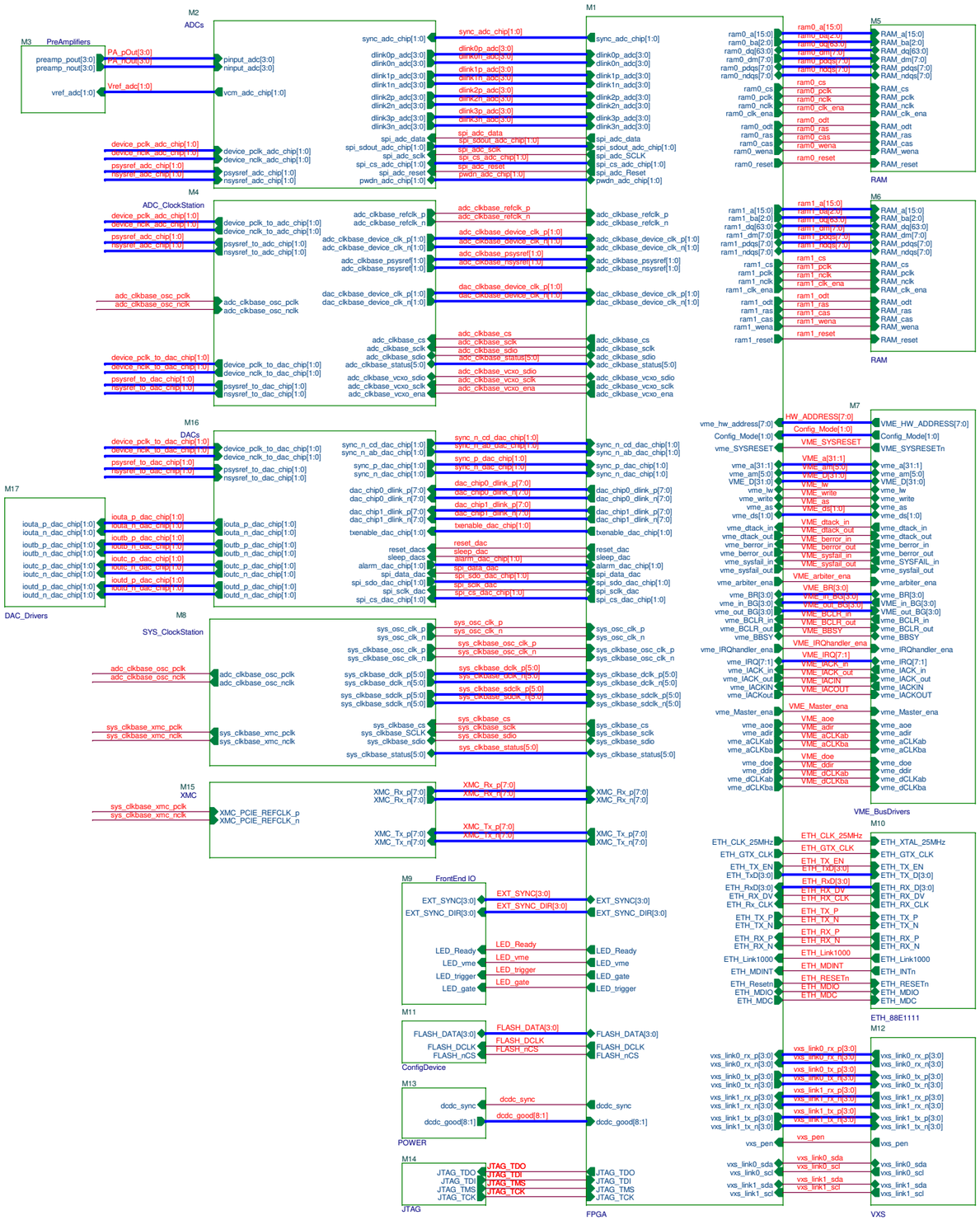


| Item No. | Part No. | Description or Size | Qty. Req. |
|---|---|---|---|
| Parts List | | | |

| Unless Otherwise Specified | | | Originator | A.Semenov | 07.24.2019 |
|---|---|---|---|---|---|
| Fractions | Decimals | Angles | Drawn | A.Semenov | 07.25.2019 |
| + - | + - | + - | Checked | N.Eddy | 07.25.2019 |
| 1. Break all sharp edges 1/64" maximum. 2. Do not scale drawing. 3. Dimensioning in accord with ANSI Y14.5 standards. | | | Approved | N.Eddy | 07.25.2019 |
| | | | Used On | | |
| Max. all machined surfaces | | | Material | | |

FERMI NATIONAL ACCELERATOR LABORATORY
UNITED STATES DEPARTMENT OF ENERGY

VME_VXS_DDamper_1GHz
Block Diagram
Schematic

| Scale | Software | Drawing Number | Rev |
|---|---|---|---|
| | OrCAD Capture Version 17.2 | 0880-ED-417250 | 0 |

Date: Monday, July 29, 2019 Sheet 1 of 46

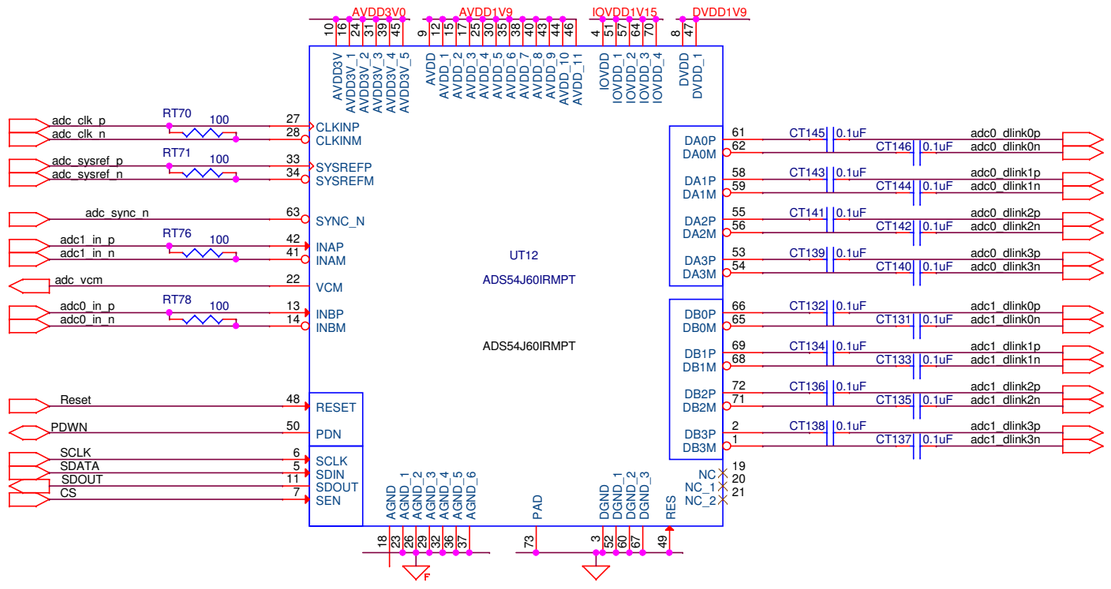


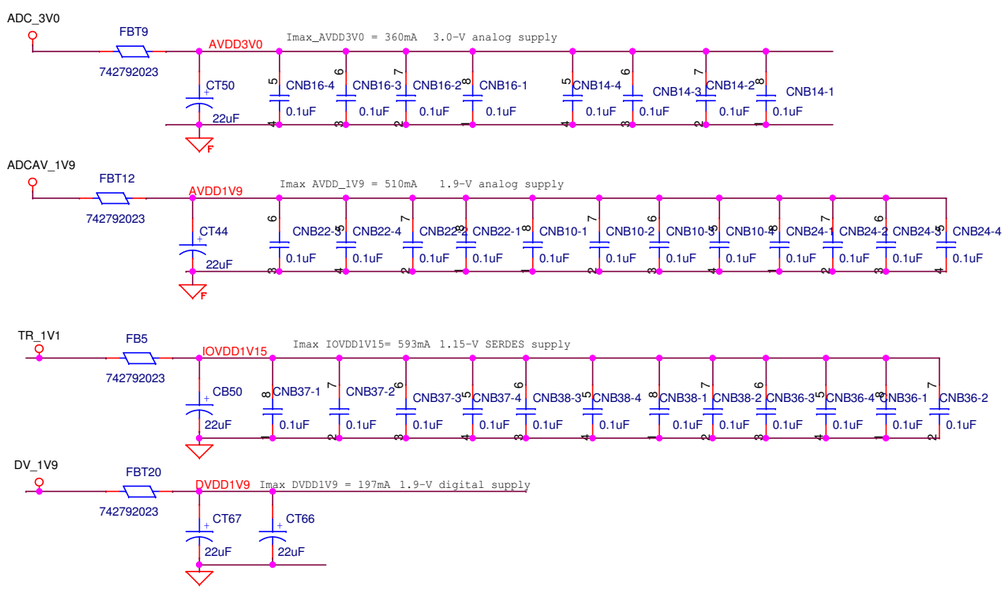


| Item No. | Part No. | Description or Size | Qty. Req. |
|---|---|---|---|

Parts List

| Unless Otherwise Specified | | | Originator | A.Semenov | 07.24.2019 |
|---|---|---|---|---|---|
| Fractions | Decimals | Angles | Drawn | A.Semenov | 07.25.2019 |
| + - | + - | + - | Checked | N.Eddy | 07.25.2019 |
| 1. Break all sharp edges 1/64" maximum. 2. Do not scale drawing. 3. Dimensioning in accord with ANSI Y14.5 standards. | | | Approved | N.Eddy | 07.25.2019 |
| | | | Used On | | |
| Max. all machined surfaces | | | Material | | |

FERMI NATIONAL ACCELERATOR LABORATORY
UNITED STATES DEPARTMENT OF ENERGY

VME_VXS_DDamper_1GHz
2 channels 16bit 1000MHz ADC's
Schematic

| Scale | Software | Drawing Number | Rev |
|---|---|---|---|
| | OrCAD Capture Version 17.2 | 0880-ED-417250 | 0 |

Date: Monday, July 29, 2019 Sheet 2 of 46

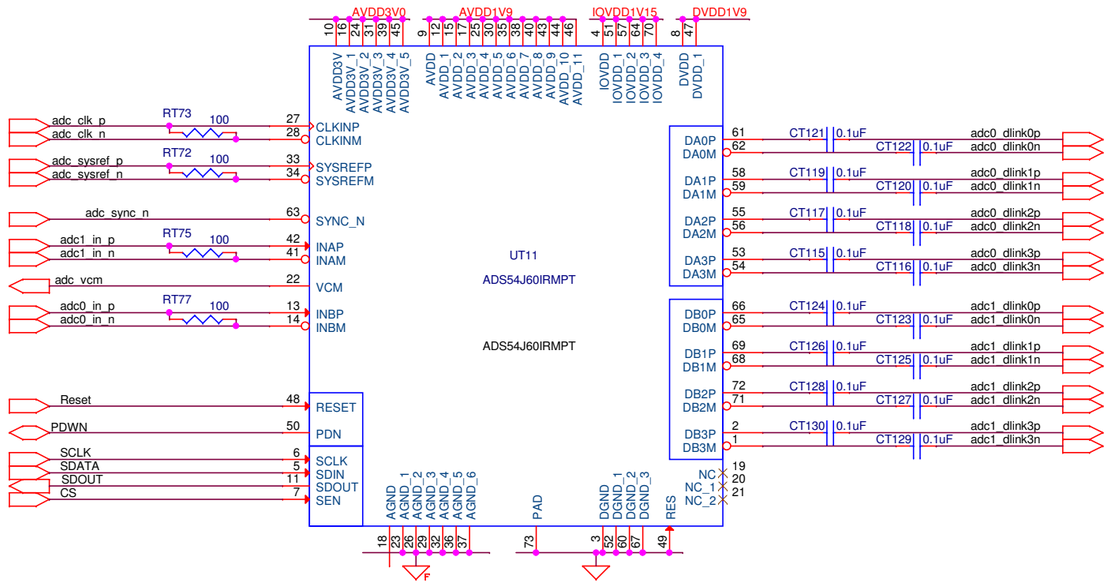


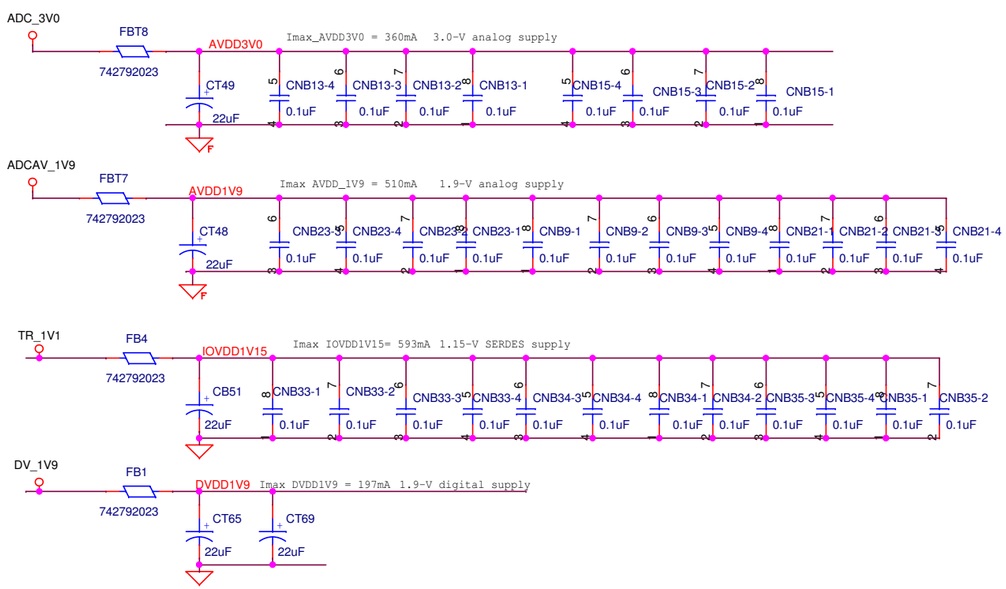


| Item No. | Part No. | Description or Size | Qty. Req. |
|---|---|---|---|
| Parts List | | | |

| Unless Otherwise Specified | | | Originator | A.Semenov | 07.24.2019 |
|---|---|---|---|---|---|
| Fractions | Decimals | Angles | Drawn | A.Semenov | 07.25.2019 |
| + - | + - | + - | Checked | N.Eddy | 07.25.2019 |
| 1. Break all sharp edges 1/64" maximum.<br>2. Do not scale drawing.<br>3. Dimensioning in accord with ANSI Y14.5 standards. | | | Approved | N.Eddy | 07.25.2019 |
| | | | Used On | | |
| Max. all machined surfaces | | | Material | | |

FERMI NATIONAL ACCELERATOR LABORATORY
UNITED STATES DEPARTMENT OF ENERGY

VME_VXS_DDamper_1GHz
2 channels 16bit 1000MHz ADC's
Schematic

| Scale | Software | Drawing Number | Rev |
|---|---|---|---|
| | OrCAD Capture Version 17.2 | 0880-ED-417250 | 0 |

Date: Monday, July 29, 2019 | Sheet 3 of 46

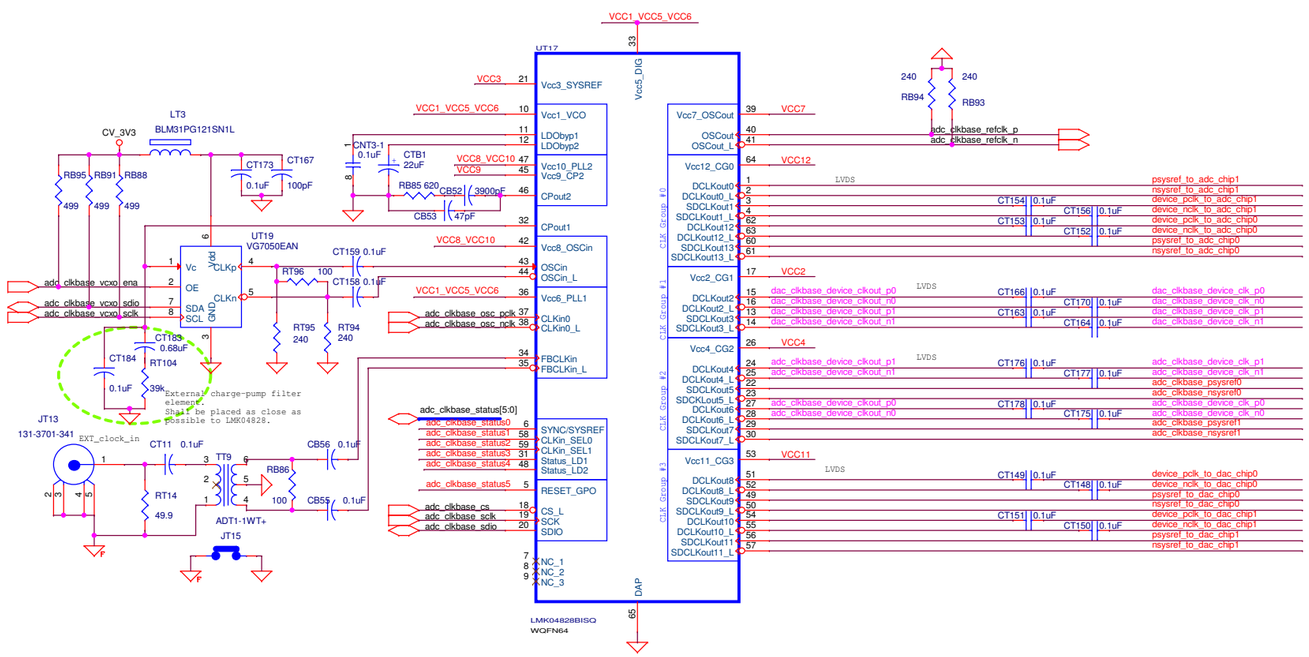


adc_clkbase_device_clk_p[1:0]
adc_clkbase_device_clk_n[1:0]
adc_clkbase_psysref[1:0]
adc_clkbase_nsysref[1:0]
device_pclk_to_adc_chip[1:0]
device_nclk_to_adc_chip[1:0]
psysref_to_adc_chip[1:0]
nsysref_to_adc_chip[1:0]
dac_clkbase_device_clk_p[1:0]
dac_clkbase_device_clk_n[1:0]
psysref_to_dac_chip[1:0]
nsysref_to_dac_chip[1:0]
device_pclk_to_dac_chip[1:0]
device_nclk_to_dac_chip[1:0]

| Item No. | Part No. | Description or Size | Qty. Req. |
|---|---|---|---|

Parts List

| Unless Otherwise Specified | | | Originator | A.Semenov | 07.24.2019 |
|---|---|---|---|---|---|
| Fractions | Decimals | Angles | Drawn | A.Semenov | 07.25.2019 |
| + - | + - | + - | Checked | N.Eddy | 07.25.2019 |
| 1. Break all sharp edges 1/64" maximum. 2. Do not scale drawing. 3. Dimensioning in accord with ANSI Y14.5 standards. | | | Approved | N.Eddy | 07.25.2019 |
| | | | Used On | | |
| Max. all machined surfaces | | | Material | | |

FERMI NATIONAL ACCELERATOR LABORATORY
UNITED STATES DEPARTMENT OF ENERGY

VME_VXS_DDamper_1GHz
ADC Clock Distribution Station
Schematic

| Scale | Software | Drawing Number | Rev |
|---|---|---|---|
| | OrCAD Capture Version 17.2 | 0880-ED-417250 | 0 |

Date: Monday, July 29, 2019 Sheet 4 of 46

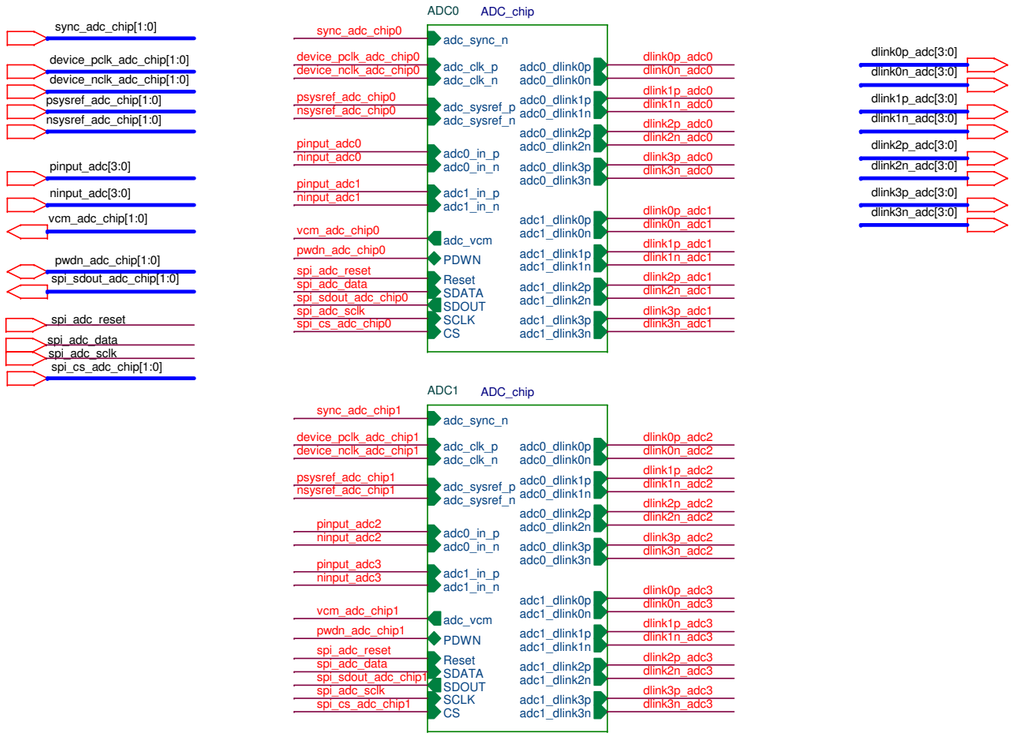


| Item No. | Part No. | Description or Size | Qty. Req. |
|---|---|---|---|
| Parts List | | | |

| Unless Otherwise Specified | | | Originator | A.Semenov | 07.24.2019 |
|---|---|---|---|---|---|
| Fractions | Decimals | Angles | Drawn | A.Semenov | 07.25.2019 |
| + - | + - | + - | Checked | N.Eddy | 07.25.2019 |
| 1. Break all sharp edges 1/64" maximum.<br>2. Do not scale drawing.<br>3. Dimensioning in accord with ANSI Y14.5 standards. | | | Approved | N.Eddy | 07.25.2019 |
| | | | Used On | | |
| √ Max. all machined surfaces | | | Material | | |

FERMI NATIONAL ACCELERATOR LABORATORY
UNITED STATES DEPARTMENT OF ENERGY

VME_VXS_DDamper_1GHz
4 channels 16bit 1000MHz ADC's
Schematic

| Scale | Software | Drawing Number | Rev |
|---|---|---|---|
| | OrCAD Capture Version 17.2 | 0880-ED-417250 | 0 |

Date: Monday, July 29, 2019 | Sheet 5 of 46

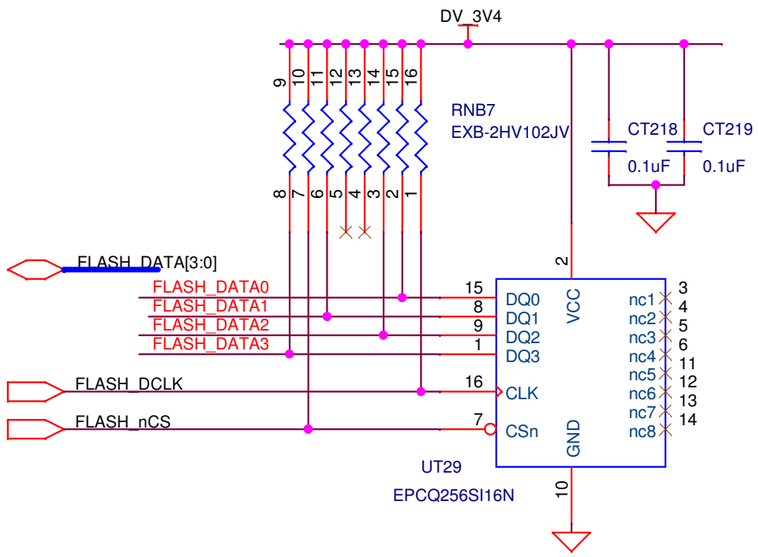


| Item No. | Part No. | Description or Size | Qty. Req. |
|---|---|---|---|

## Parts List

| Unless Otherwise Specified | | | Originator | A.Semenov | 07.24.2019 |
|---|---|---|---|---|---|
| Fractions | Decimals | Angles | Drawn | A.Semenov | 07.25.2019 |
| + - | + - | + - | Checked | N.Eddy | 07.25.2019 |
| | | | Approved | N.Eddy | 07.25.2019 |

1. Break all sharp edges 1/64" maximum.
2. Do not scale drawing.
3. Dimensioning in accord with ANSI Y14.5 standards.

√ Max. all machined surfaces

Used On

Material

FERMI NATIONAL ACCELERATOR LABORATORY
UNITED STATES DEPARTMENT OF ENERGY

VME_VXS_DDamper_1GHz
FPGA Serial Configuration Device
Schematic

| Scale | Software | Drawing Number | Rev |
|---|---|---|---|
| | OrCAD Capture Version 17.2 | 0880-ED-417250 | 0 |

Date: Monday, July 29, 2019 | Sheet 6 of 46

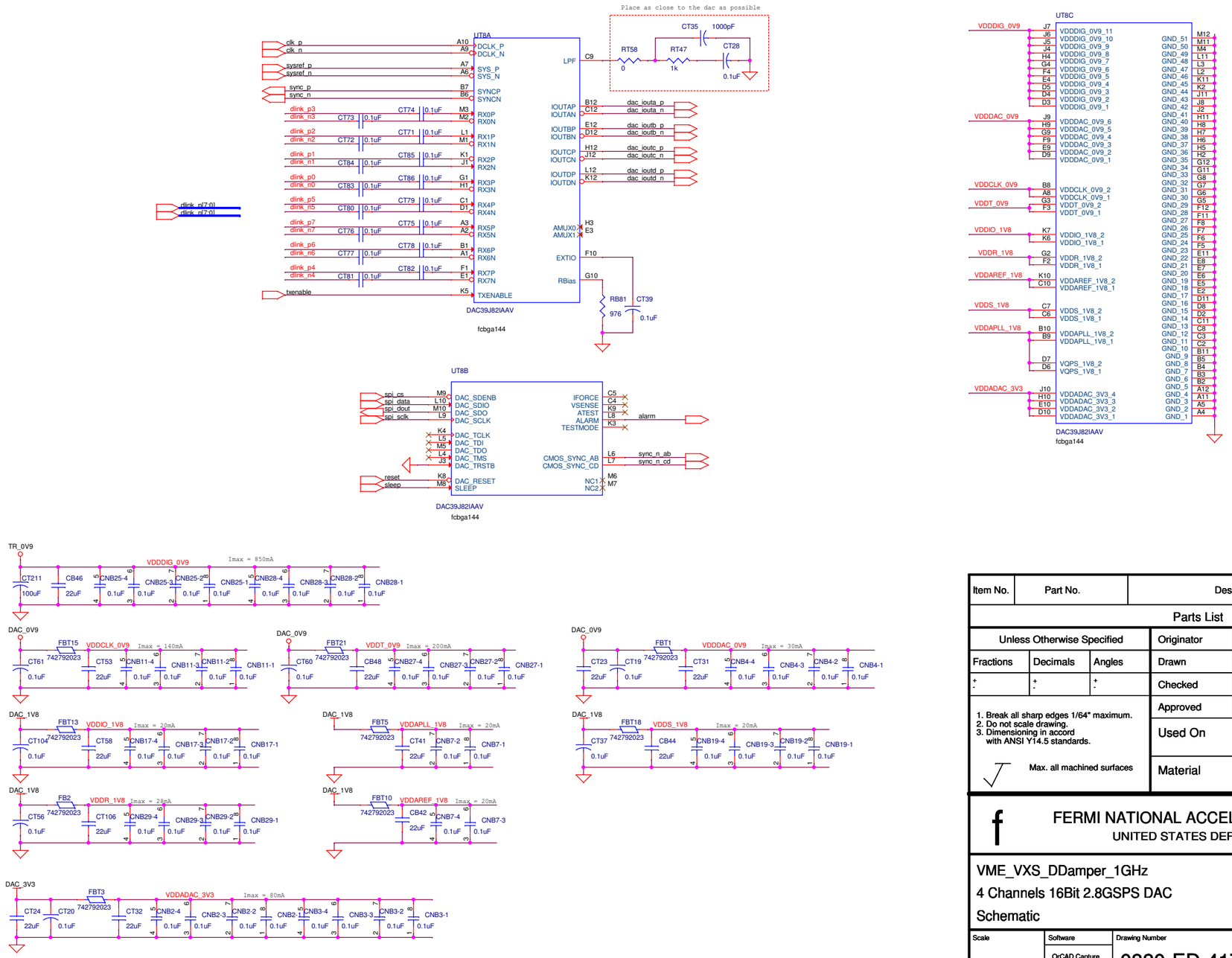


| Item No. | Part No. | Description or Size | Qty. Req. |
|---|---|---|---|
| Parts List | | | |

| Unless Otherwise Specified | | | Originator | A.Semenov | 07.24.2019 |
|---|---|---|---|---|---|
| Fractions | Decimals | Angles | Drawn | A.Semenov | 07.25.2019 |
| + - | + - | + - | Checked | N.Eddy | 07.25.2019 |
| 1. Break all sharp edges 1/64" maximum. 2. Do not scale drawing. 3. Dimensioning in accord with ANSI Y14.5 standards. | | | Approved | N.Eddy | 07.25.2019 |
| | | | Used On | | |
| Max. all machined surfaces | | | Material | | |

FERMI NATIONAL ACCELERATOR LABORATORY
UNITED STATES DEPARTMENT OF ENERGY

VME_VXS_DDamper_1GHz
4 Channels 16Bit 2.8GSPS DAC
Schematic

| Scale | Software | Drawing Number | Rev |
|---|---|---|---|
| | OrCAD Capture Version 10.3.0 | 0880-ED-417250 | 0 |

Date: Monday, July 29, 2019 Sheet 7 of 46

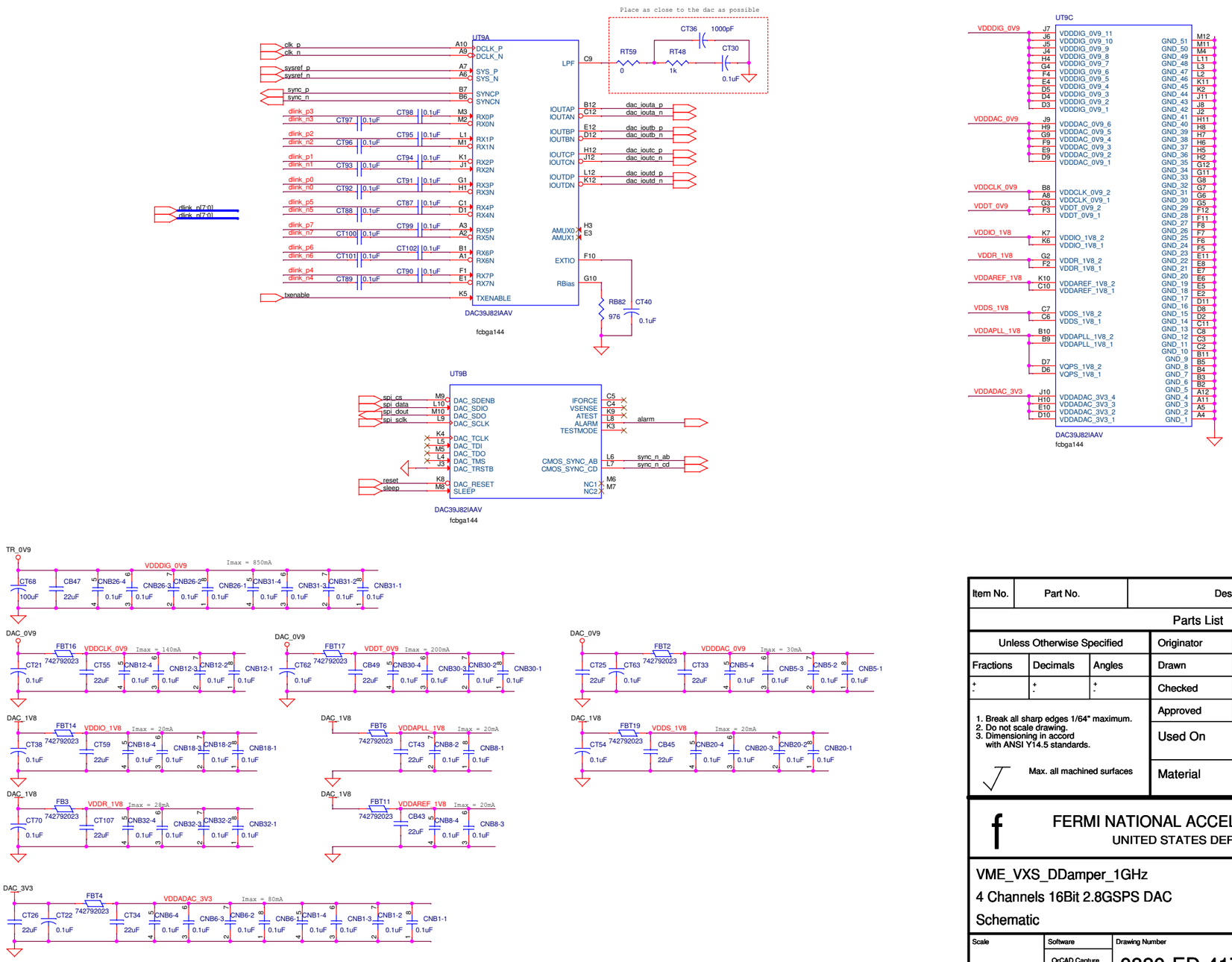


| Item No. | Part No. | Description or Size | Qty. Req. |
|---|---|---|---|
| Parts List | | | |

| Unless Otherwise Specified | | | Originator | A.Semenov | 07.24.2019 |
|---|---|---|---|---|---|
| Fractions | Decimals | Angles | Drawn | A.Semenov | 07.25.2019 |
| + - | + - | + - | Checked | N.Eddy | 07.25.2019 |
| 1. Break all sharp edges 1/64" maximum. 2. Do not scale drawing. 3. Dimensioning in accord with ANSI Y14.5 standards. | | | Approved | N.Eddy | 07.25.2019 |
| | | | Used On | | |
| Max. all machined surfaces | | | Material | | |

FERMI NATIONAL ACCELERATOR LABORATORY
UNITED STATES DEPARTMENT OF ENERGY

VME_VXS_DDamper_1GHz
4 Channels 16Bit 2.8GSPS DAC
Schematic

| Scale | Software | Drawing Number | Rev |
|---|---|---|---|
| | OrCAD Capture Version 10.3.0 | 0880-ED-417250 | 0 |

Date: Monday, July 29, 2019 Sheet 8 of 46

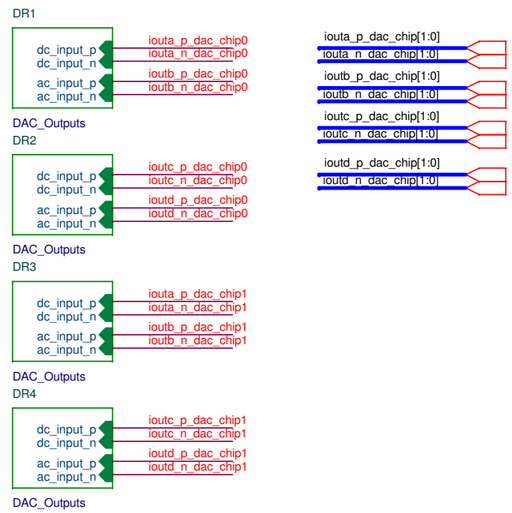


| Item No. | Part No. | Description or Size | Qty. Req. |
|---|---|---|---|
| Parts List | | | |

| Unless Otherwise Specified | | | Originator | A.Semenov | 07.24.2019 |
|---|---|---|---|---|---|
| Fractions | Decimals | Angles | Drawn | A.Semenov | 07.25.2019 |
| + - | + - | + - | Checked | N.Eddy | 07.25.2019 |
| | | | Approved | N.Eddy | 07.25.2019 |
| | | | Used On | | |
| | | | Material | | |

1. Break all sharp edges 1/64" maximum.
2. Do not scale drawing.
3. Dimensioning in accord with ANSI Y14.5 standards.

Max. all machined surfaces

FERMI NATIONAL ACCELERATOR LABORATORY
UNITED STATES DEPARTMENT OF ENERGY

VME_VXS_DDamper_1GHz
4 Channels DAC's Output Drivers
Schematic

| Scale | Software | Drawing Number | Rev |
|---|---|---|---|
| | OrCAD Capture Version 16.3.0 | 0880-ED-417250 | 0 |

Date: Monday, July 29, 2019 | Sheet 9 of 46

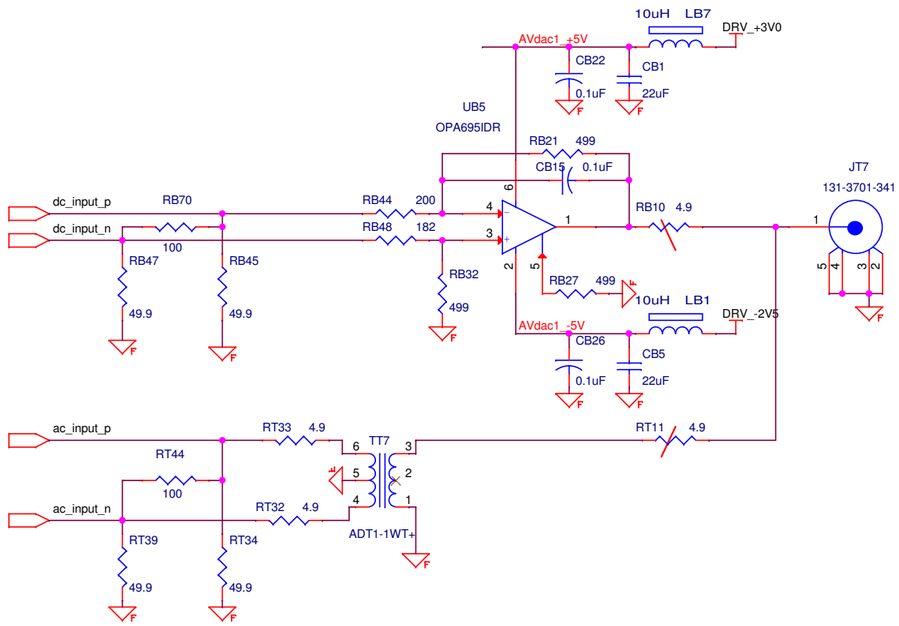


X - not soldered

/ - not soldered for DC mode

\ - not soldered for AC Configuration

| Item No. | Part No. | Description or Size | Qty. Req. |
|---|---|---|---|

Parts List

| Unless Otherwise Specified | | | Originator | A.Semenov | 07.24.2019 |
|---|---|---|---|---|---|
| Fractions | Decimals | Angles | Drawn | A.Semenov | 07.25.2019 |
| + - | + - | + - | Checked | N.Eddy | 07.25.2019 |
| 1. Break all sharp edges 1/64" maximum.<br>2. Do not scale drawing.<br>3. Dimensioning in accord with ANSI Y14.5 standards. | | | Approved | N.Eddy | 07.25.2019 |
| | | | Used On | | |
| Max. all machined surfaces | | | Material | | |

FERMI NATIONAL ACCELERATOR LABORATORY
UNITED STATES DEPARTMENT OF ENERGY

VME_VXS_DDamper_1GHz
DAC's Output Driver
Schematic

| Scale | Software | Drawing Number | Rev |
|---|---|---|---|
| | OrCAD Capture Version 16.3.0 | 0880-ED-417250 | 0 |

Date: Monday, July 29, 2019 | Sheet 10 of 46

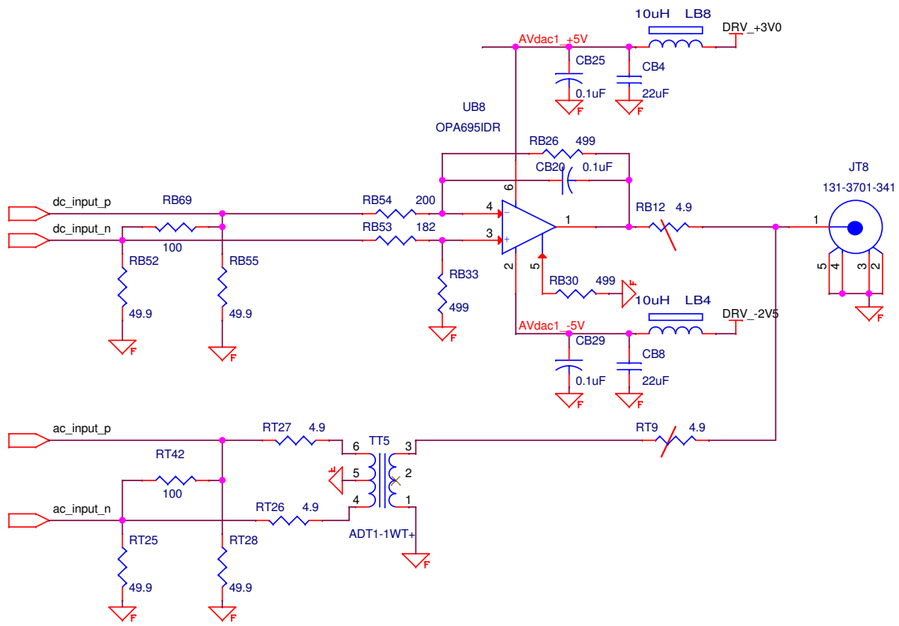


X - not soldered

/ - not soldered for DC mode

\ - not soldered for AC Configuration

| Item No. | Part No. | Description or Size | Qty. Req. |
|---|---|---|---|

Parts List

| Unless Otherwise Specified | | | Originator | A.Semenov | 07.24.2019 |
|---|---|---|---|---|---|
| Fractions | Decimals | Angles | Drawn | A.Semenov | 07.25.2019 |
| + - | + - | + - | Checked | N.Eddy | 07.25.2019 |
| 1. Break all sharp edges 1/64" maximum.<br>2. Do not scale drawing.<br>3. Dimensioning in accord with ANSI Y14.5 standards. | | | Approved | N.Eddy | 07.25.2019 |
| | | | Used On | | |
| Max. all machined surfaces | | | Material | | |

FERMI NATIONAL ACCELERATOR LABORATORY
UNITED STATES DEPARTMENT OF ENERGY

VME_VXS_DDamper_1GHz
DAC's Output Driver
Schematic

| Scale | Software | Drawing Number | Rev |
|---|---|---|---|
| | OrCAD Capture Version 16.3.0 | 0880-ED-417250 | 0 |

Date: Monday, July 29, 2019 | Sheet 11 of 46

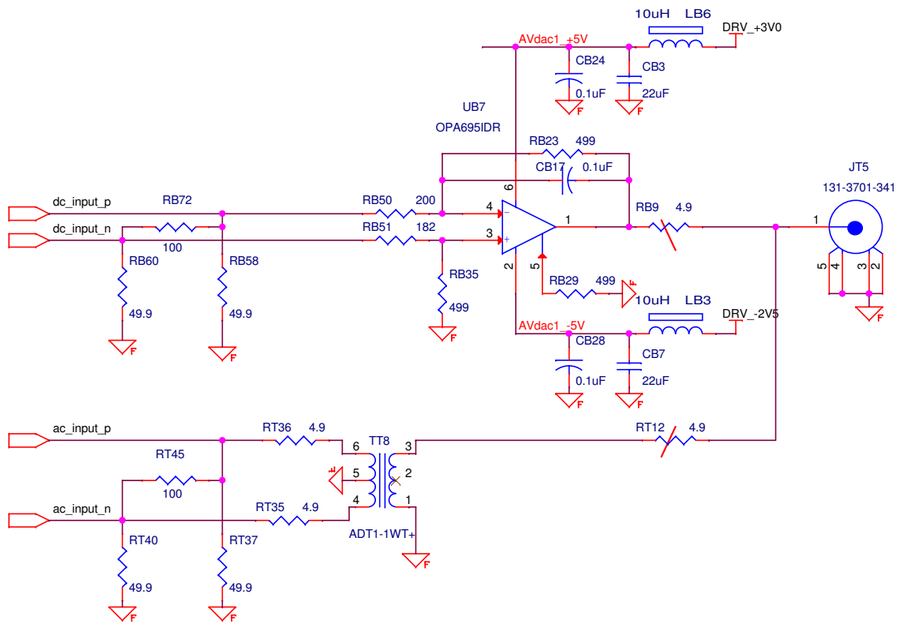


X - not soldered

/ - not soldered for DC mode

\ - not soldered for AC Configuration

| Item No. | Part No. | Description or Size | Qty. Req. |
|---|---|---|---|

Parts List

| Unless Otherwise Specified | | | Originator | A.Semenov | 07.24.2019 |
|---|---|---|---|---|---|
| Fractions | Decimals | Angles | Drawn | A.Semenov | 07.25.2019 |
| + - | + - | + - | Checked | N.Eddy | 07.25.2019 |
| 1. Break all sharp edges 1/64" maximum.<br>2. Do not scale drawing.<br>3. Dimensioning in accord with ANSI Y14.5 standards. | | | Approved | N.Eddy | 07.25.2019 |
| | | | Used On | | |
| Max. all machined surfaces | | | Material | | |

FERMI NATIONAL ACCELERATOR LABORATORY
UNITED STATES DEPARTMENT OF ENERGY

VME_VXS_DDamper_1GHz
DAC's Output Driver
Schematic

| Scale | Software | Drawing Number | Rev |
|---|---|---|---|
| | OrCAD Capture Version 16.3.0 | 0880-ED-417250 | 0 |

Date: Monday, July 29, 2019 | Sheet 12 of 46

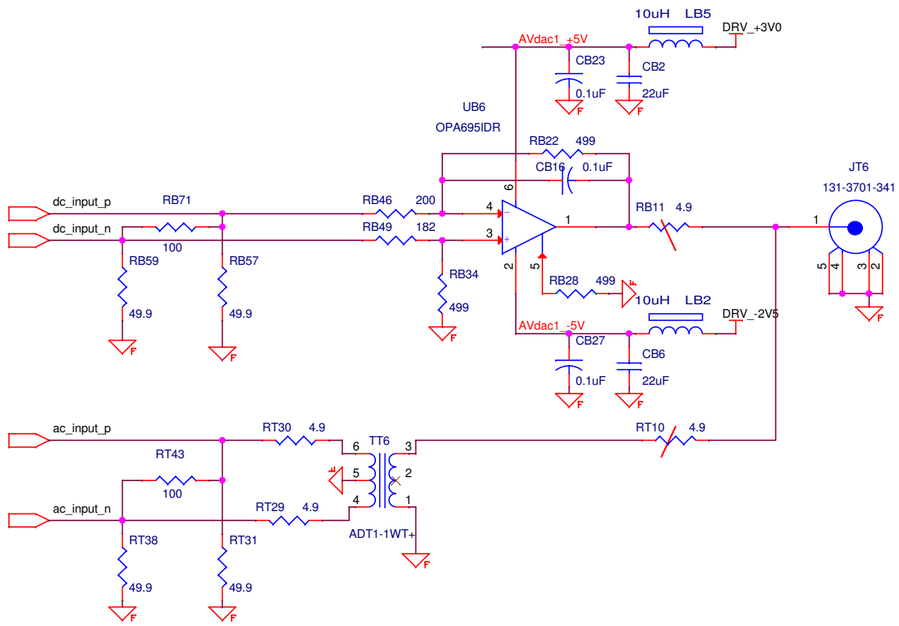


X - not soldered

/ - not soldered for DC mode

\ - not soldered for AC Configuration

| Item No. | Part No. | Description or Size | Qty. Req. |
|---|---|---|---|
| Parts List | | | |

| Unless Otherwise Specified | | | Originator | A.Semenov | 07.24.2019 |
|---|---|---|---|---|---|
| Fractions | Decimals | Angles | Drawn | A.Semenov | 07.25.2019 |
| + - | + - | + - | Checked | N.Eddy | 07.25.2019 |
| 1. Break all sharp edges 1/64" maximum.<br>2. Do not scale drawing.<br>3. Dimensioning in accord with ANSI Y14.5 standards. | | | Approved | N.Eddy | 07.25.2019 |
| | | | Used On | | |
| Max. all machined surfaces | | | Material | | |

FERMI NATIONAL ACCELERATOR LABORATORY
UNITED STATES DEPARTMENT OF ENERGY

VME_VXS_DDamper_1GHz
DAC's Output Driver
Schematic

| Scale | Software | Drawing Number | Rev |
|---|---|---|---|
| | OrCAD Capture Version 16.3.0 | 0880-ED-417250 | 0 |

Date: Monday, July 29, 2019 | Sheet 13 of 46

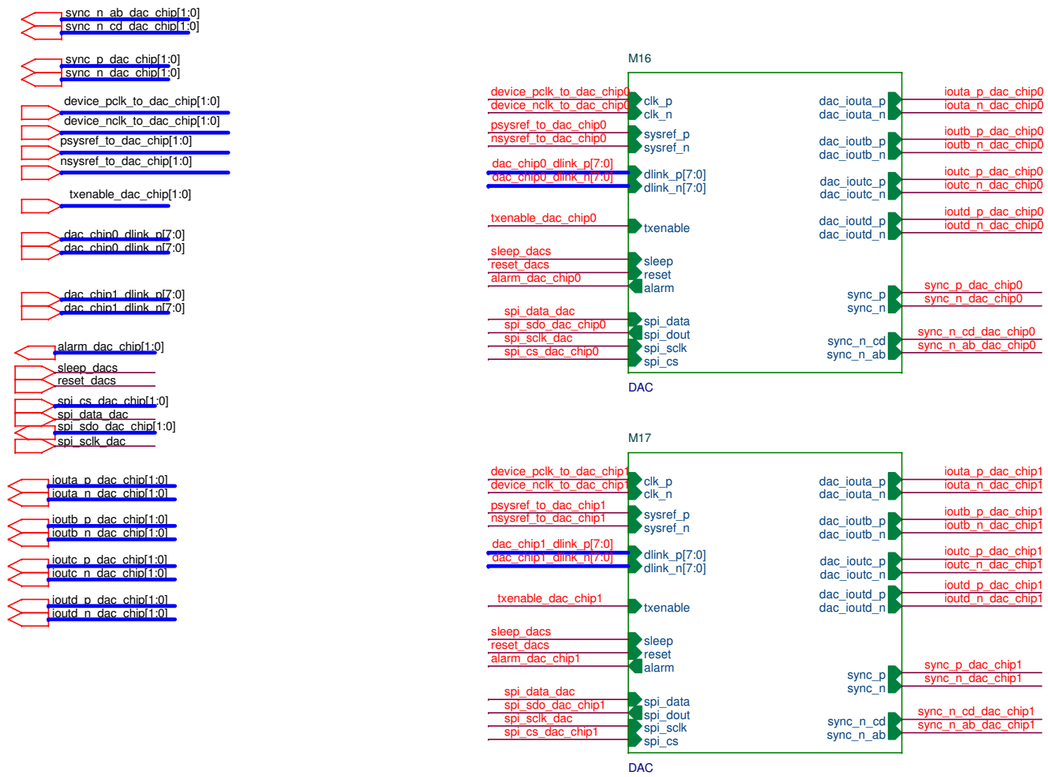


| Item No. | Part No. | Description or Size | Qty. Req. |
|---|---|---|---|
| Parts List | | | |

| Unless Otherwise Specified | | | Originator | A.Semenov | 07.24.2019 |
|---|---|---|---|---|---|
| Fractions | Decimals | Angles | Drawn | A.Semenov | 07.25.2019 |
| + - | + - | + - | Checked | N.Eddy | 07.25.2019 |
| 1. Break all sharp edges 1/64" maximum.<br>2. Do not scale drawing.<br>3. Dimensioning in accord with ANSI Y14.5 standards. | | | Approved | N.Eddy | 07.25.2019 |
| | | | Used On | | |
| √ Max. all machined surfaces | | | Material | | |

FERMI NATIONAL ACCELERATOR LABORATORY
UNITED STATES DEPARTMENT OF ENERGY

VME_VXS_DDamper_1GHz
8 Channels 16Bit 2.8GSPS DAC
Schematic

| Scale | Software | Drawing Number | Rev |
|---|---|---|---|
| | OrCAD Capture Version 17.2 | 0880-ED-417250 | 0 |

Date: Monday, July 29, 2019 | Sheet 14 of 46

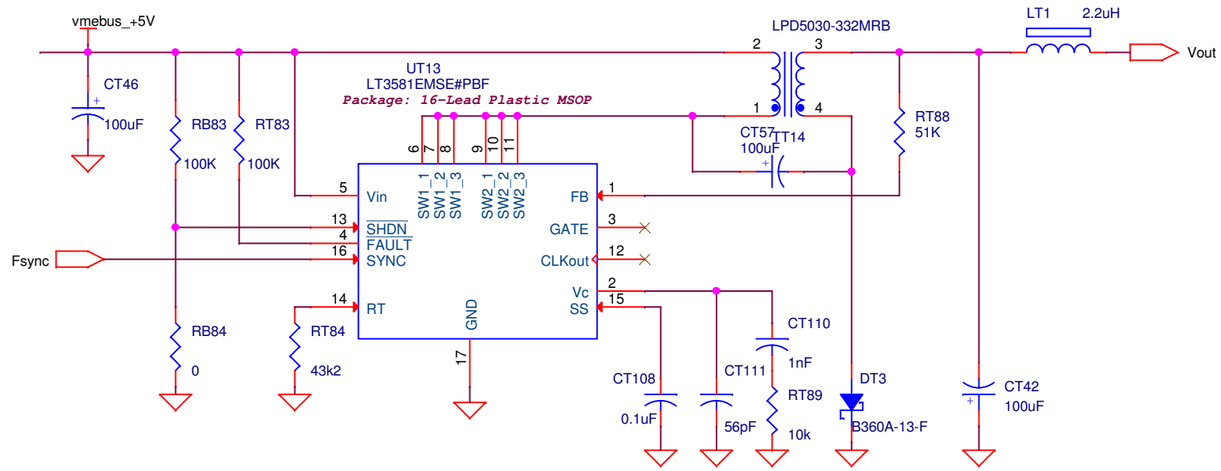


| Item No. | Part No. | Description or Size | Qty. Req. |
|---|---|---|---|

Parts List

| Unless Otherwise Specified | | | Originator | A.Semenov | 07.24.2019 |
|---|---|---|---|---|---|
| Fractions | Decimals | Angles | Drawn | A.Semenov | 07.25.2019 |
| + - | + - | + - | Checked | N.Eddy | 07.25.2019 |
| 1. Break all sharp edges 1/64" maximum.<br>2. Do not scale drawing.<br>3. Dimensioning in accord with ANSI Y14.5 standards. | | | Approved | N.Eddy | 07.25.2019 |
| | | | Used On | | |
| √ Max. all machined surfaces | | | Material | | |

FERMI NATIONAL ACCELERATOR LABORATORY
UNITED STATES DEPARTMENT OF ENERGY

VME_VXS_DDamper_1GHz
Negative Voltage DCDC convertor
Schematic

| Scale | Software | Drawing Number | Rev |
|---|---|---|---|
| | OrCAD Capture Version 17.2 | 0880-ED-417250 | 0 |

Date: Monday, July 29, 2019 | Sheet 15 of 46

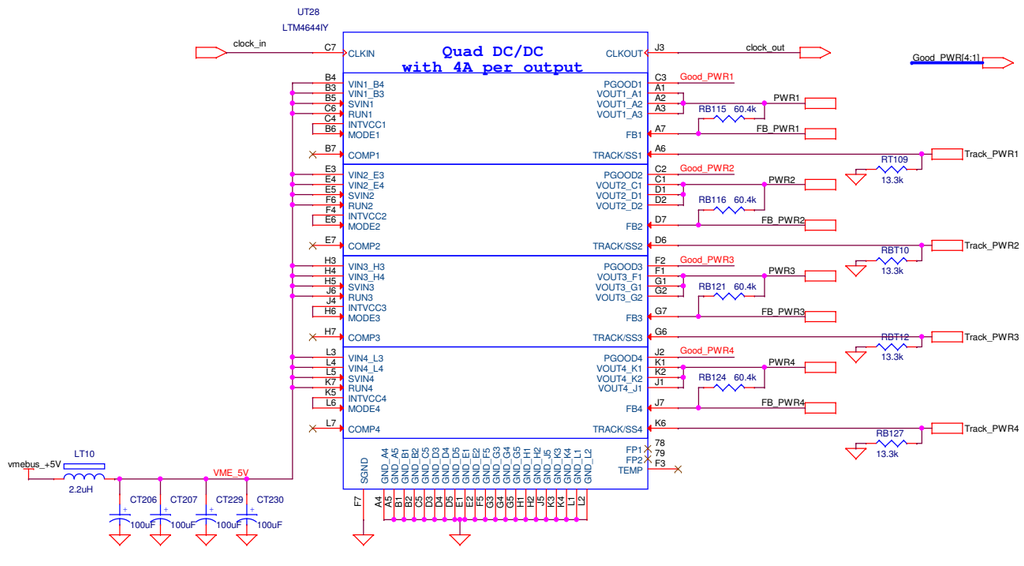


| Item No. | Part No. | Description or Size | Qty. Req. |
|---|---|---|---|

Parts List

| Unless Otherwise Specified | | | Originator | A.Semenov | 07.24.2019 |
|---|---|---|---|---|---|
| Fractions | Decimals | Angles | Drawn | A.Semenov | 07.25.2019 |
| + - | + - | + - | Checked | N.Eddy | 07.25.2019 |
| 1. Break all sharp edges 1/64" maximum.<br>2. Do not scale drawing.<br>3. Dimensioning in accord with ANSI Y14.5 standards. | | | Approved | N.Eddy | 07.25.2019 |
| | | | Used On | | |
| Max. all machined surfaces | | | Material | | |

FERMI NATIONAL ACCELERATOR LABORATORY
UNITED STATES DEPARTMENT OF ENERGY

VME_VXS_DDamper_1GHz
Positive Voltage DCDC convertor
Schematic

| Scale | Software | Drawing Number | Rev |
|---|---|---|---|
| | OrCAD Capture Version 17.2 | 0880-ED-417250 | 0 |

Date: Monday, July 29, 2019 | Sheet 16 of 46

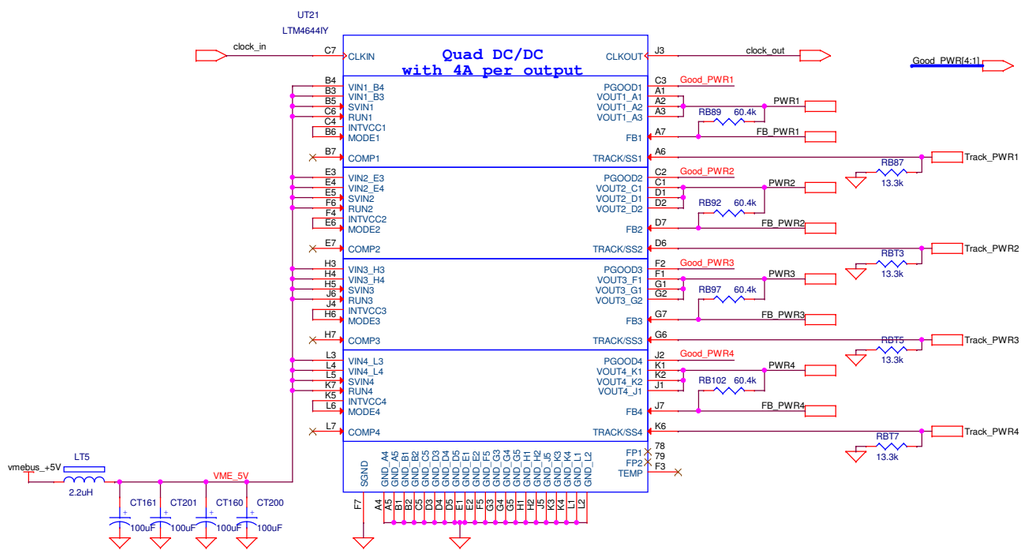


| Item No. | Part No. | Description or Size | Qty. Req. |
|---|---|---|---|

Parts List

| Unless Otherwise Specified | | | Originator | A.Semenov | 07.24.2019 |
|---|---|---|---|---|---|
| Fractions | Decimals | Angles | Drawn | A.Semenov | 07.25.2019 |
| + - | + - | + - | Checked | N.Eddy | 07.25.2019 |
| 1. Break all sharp edges 1/64" maximum.<br>2. Do not scale drawing.<br>3. Dimensioning in accord with ANSI Y14.5 standards. | | | Approved | N.Eddy | 07.25.2019 |
| | | | Used On | | |
| Max. all machined surfaces | | | Material | | |

FERMI NATIONAL ACCELERATOR LABORATORY
UNITED STATES DEPARTMENT OF ENERGY

VME_VXS_DDamper_1GHz
Positive Voltage DCDC convertor
Schematic

| Scale | Software | Drawing Number | Rev |
|---|---|---|---|
| | OrCAD Capture Version 17.2 | 0880-ED-417250 | 0 |

Date: Monday, July 29, 2019 | Sheet 17 of 46

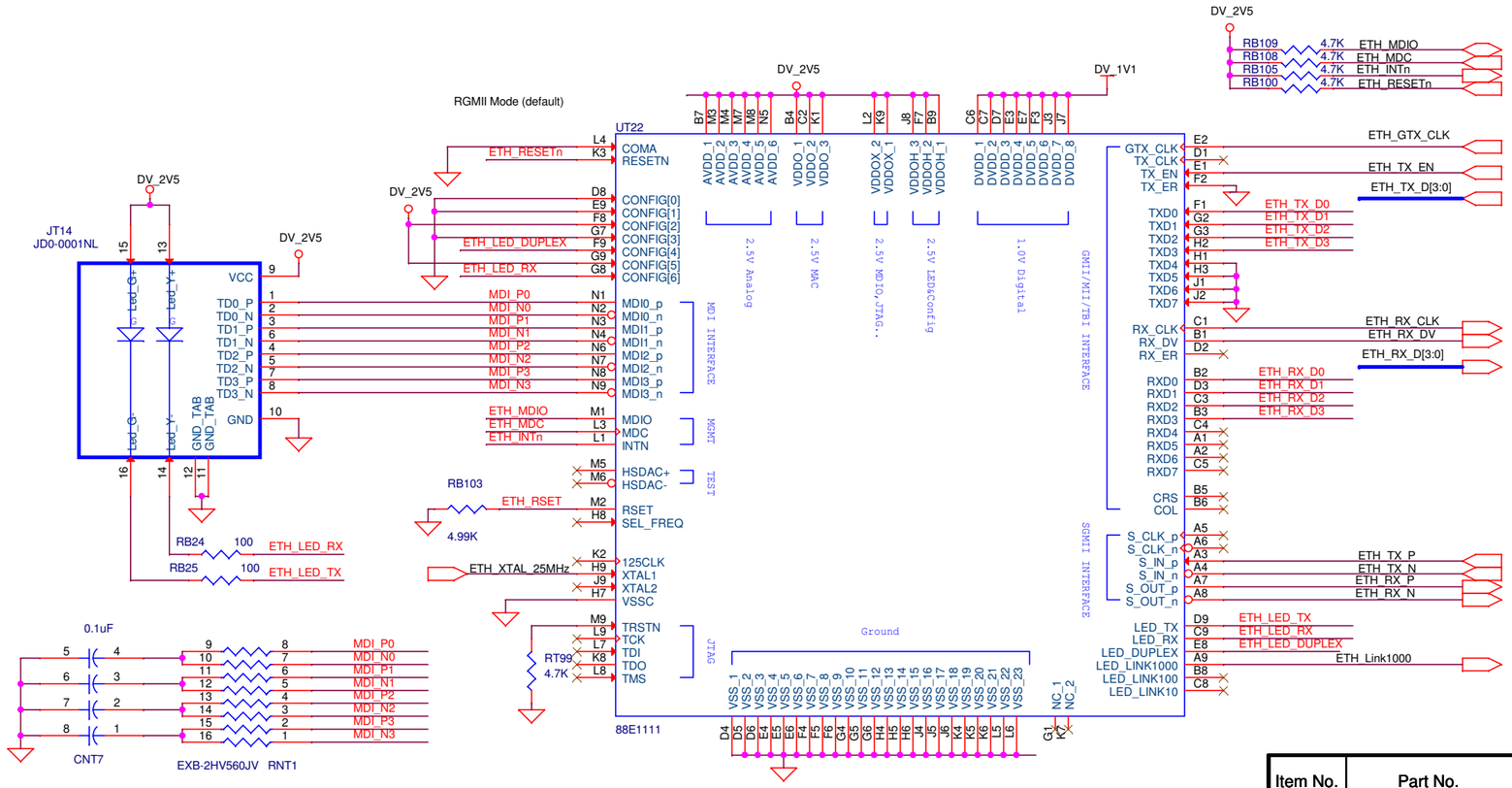


| Item No. | Part No. | Description or Size | Qty. Req. |
|---|---|---|---|
| Parts List | | | |

| Unless Otherwise Specified | | | Originator | A.Semenov | 07.24.2019 |
|---|---|---|---|---|---|
| Fractions | Decimals | Angles | Drawn | A.Semenov | 07.25.2019 |
| + - | + - | + - | Checked | N.Eddy | 07.25.2019 |
| 1. Break all sharp edges 1/64" maximum.<br>2. Do not scale drawing.<br>3. Dimensioning in accord with ANSI Y14.5 standards. | | | Approved | N.Eddy | 07.25.2019 |
| | | | Used On | | |
| Max. all machined surfaces | | | Material | | |

FERMI NATIONAL ACCELERATOR LABORATORY
UNITED STATES DEPARTMENT OF ENERGY

VME_VXS_DDamper_1GHz
VME_VXS_FPGA Ports.
Schematic

| Scale | Software | Drawing Number | Rev |
|---|---|---|---|
| | OrCAD Capture Version 17.2 | 0880-ED-417250 | 0 |

Date: Monday, July 29, 2019 Sheet 18 of 46

| Item No. | Part No. | Description or Size | Qty. Req. |
|---|---|---|---|
| Parts List | | | |

| Unless Otherwise Specified | | | Originator | A.Semenov | 07.24.2019 |
|---|---|---|---|---|---|
| Fractions | Decimals | Angles | Drawn | A.Semenov | 07.25.2019 |
| + - | + - | + - | Checked | N.Eddy | 07.25.2019 |
| 1. Break all sharp edges 1/64" maximum.<br>2. Do not scale drawing.<br>3. Dimensioning in accord with ANSI Y14.5 standards. | | | Approved | N.Eddy | 07.25.2019 |
| | | | Used On | | |
| Max. all machined surfaces | | | Material | | |

FERMI NATIONAL ACCELERATOR LABORATORY
UNITED STATES DEPARTMENT OF ENERGY

VME_VXS_DDamper_1GHz
FPGA's Ports
Schematic

| Scale | Software | Drawing Number | Rev |
|---|---|---|---|
| | OrCAD Capture Version 17.2 | 0880-ED-417250 | 0 |

Date: Monday, July 29, 2019 | Sheet 19 of 46

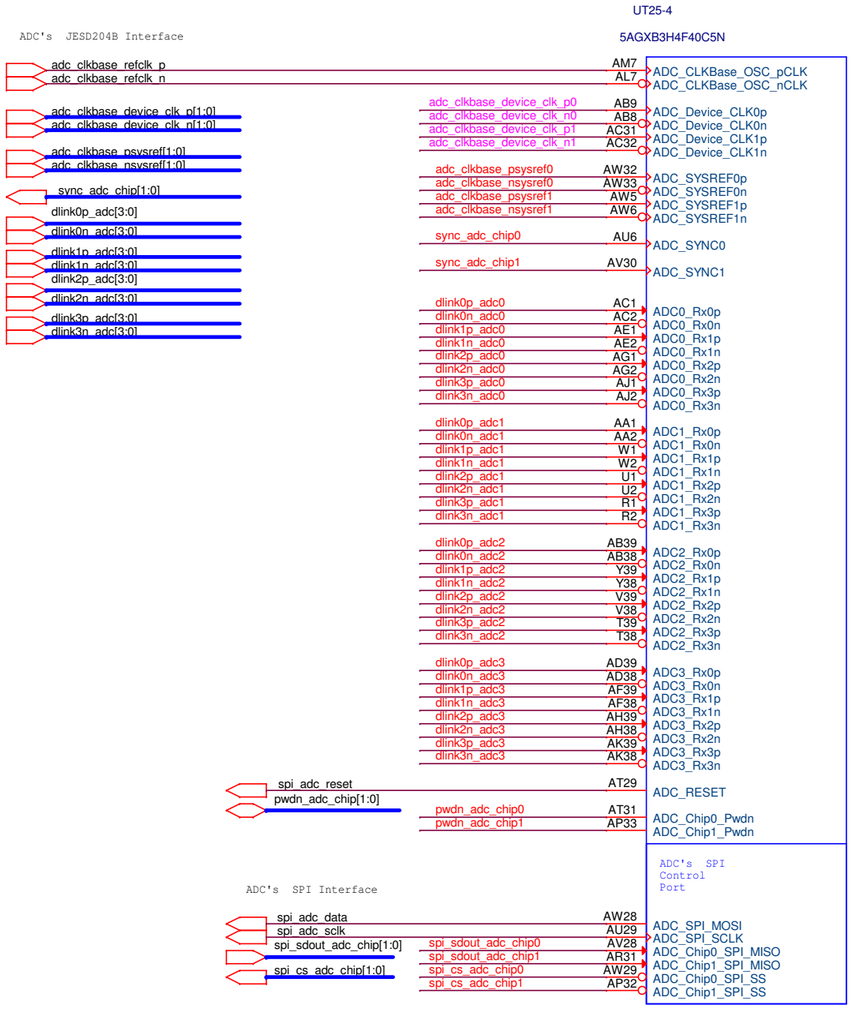


| Item No. | Part No. | Description or Size | Qty. Req. |
|---|---|---|---|

Parts List

| Unless Otherwise Specified | | | Originator | A.Semenov | 07.24.2019 |
|---|---|---|---|---|---|
| Fractions | Decimals | Angles | Drawn | A.Semenov | 07.25.2019 |
| + - | + - | + - | Checked | N.Eddy | 07.25.2019 |
| 1. Break all sharp edges 1/64" maximum.<br>2. Do not scale drawing.<br>3. Dimensioning in accord with ANSI Y14.5 standards. | | | Approved | N.Eddy | 07.25.2019 |
| | | | Used On | | |
| Max. all machined surfaces | | | Material | | |

FERMI NATIONAL ACCELERATOR LABORATORY
UNITED STATES DEPARTMENT OF ENERGY

VME_VXS_DDamper_1GHz
ADC's Port
Schematic

| Scale | Software | Drawing Number | Rev |
|---|---|---|---|
| | OrCAD Capture Version 17.2 | 0880-ED-417250 | 0 |

Date: Monday, July 29, 2019 Sheet 20 of 46

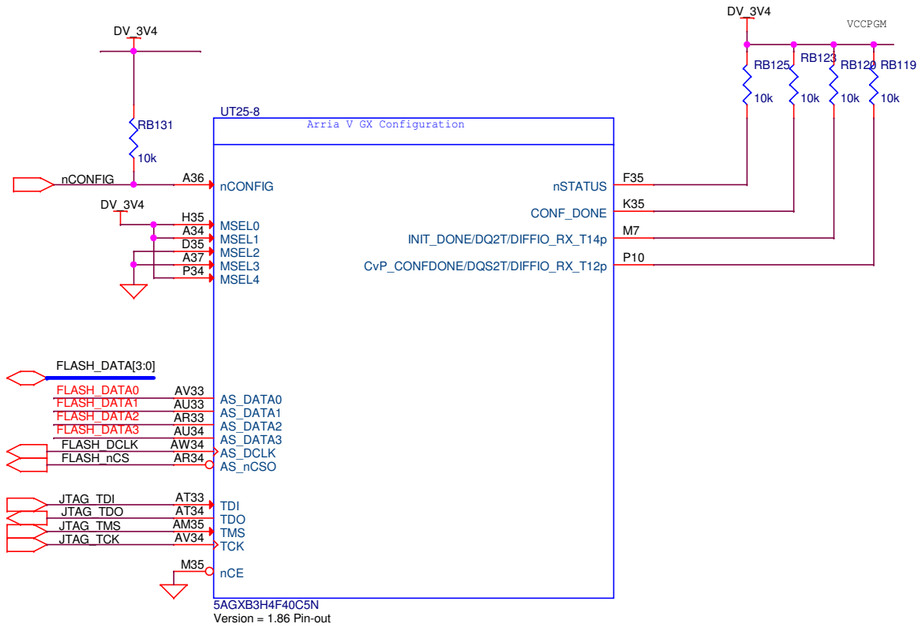


| Item No. | Part No. | Description or Size | Qty. Req. |
|---|---|---|---|
| Parts List | | | |

| Unless Otherwise Specified | | | Originator | A.Semenov | 07.24.2019 |
|---|---|---|---|---|---|
| Fractions | Decimals | Angles | Drawn | A.Semenov | 07.25.2019 |
| + - | + - | + - | Checked | N.Eddy | 07.25.2019 |
| 1. Break all sharp edges 1/64" maximum.<br>2. Do not scale drawing.<br>3. Dimensioning in accord with ANSI Y14.5 standards. | | | Approved | N.Eddy | 07.25.2019 |
| | | | Used On | | |
| Max. all machined surfaces | | | Material | | |

FERMI NATIONAL ACCELERATOR LABORATORY
UNITED STATES DEPARTMENT OF ENERGY

VME_VXS_DDamper_1GHz
ADC's FPGA : Control Port
Schematic

| Scale | Software | Drawing Number | Rev |
|---|---|---|---|
| | OrCAD Capture Version 17.2 | 0880-ED-417250 | 0 |

Date: Monday, July 29, 2019 | Sheet 21 of 46

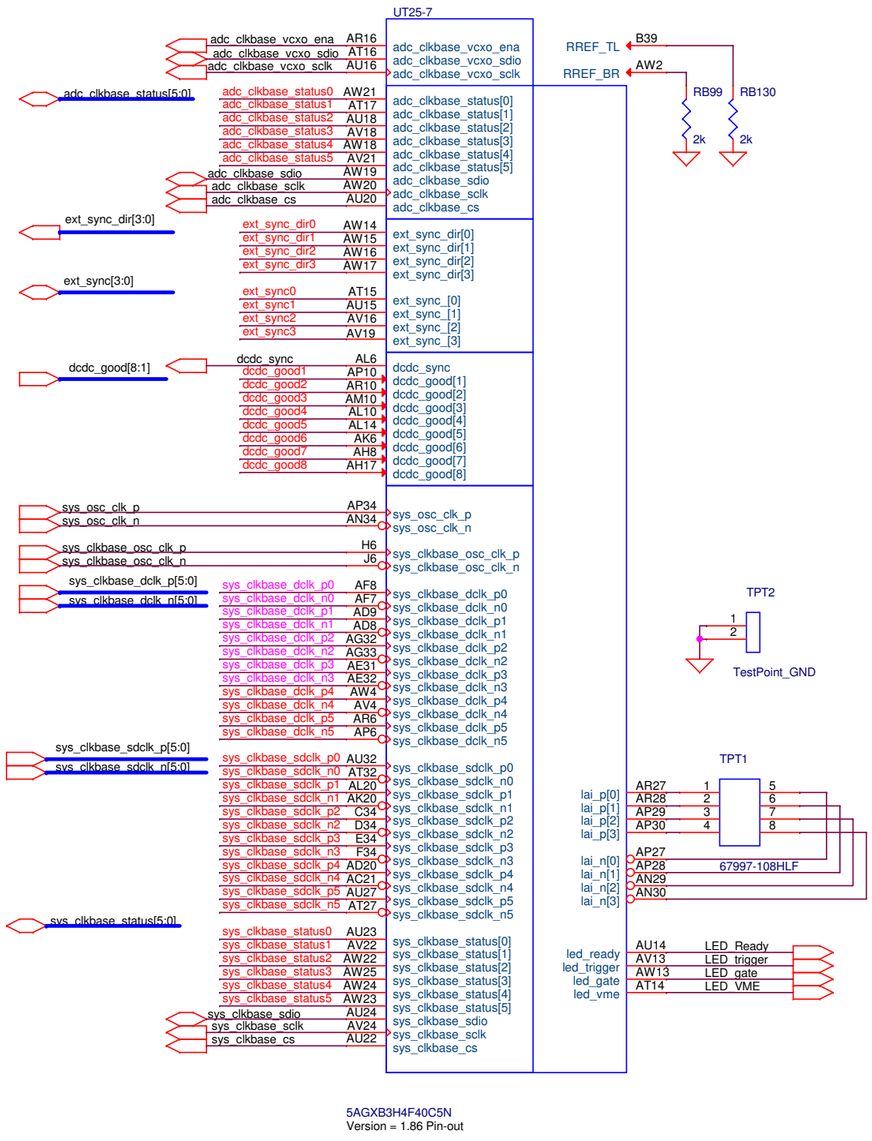


| Item No. | Part No. | Description or Size | Qty. Req. |
|---|---|---|---|

Parts List

| Unless Otherwise Specified | | | Originator | A.Semenov | 07.24.2019 |
|---|---|---|---|---|---|
| Fractions | Decimals | Angles | Drawn | A.Semenov | 07.25.2019 |
| + - | + - | + - | Checked | N.Eddy | 07.25.2019 |
| | | | Approved | N.Eddy | 07.25.2019 |

1. Break all sharp edges 1/64" maximum.
2. Do not scale drawing.
3. Dimensioning in accord with ANSI Y14.5 standards.

Max. all machined surfaces

Used On

Material

FERMI NATIONAL ACCELERATOR LABORATORY
UNITED STATES DEPARTMENT OF ENERGY

VME_VXS_DDamper_1GHz
ADC's FPGA : Control Port
Schematic

| Scale | Software | Drawing Number | Rev |
|---|---|---|---|
| | OrCAD Capture Version 17.2 | 0880-ED-417250 | 0 |

Date: Monday, July 29, 2019 | Sheet 22 of 46

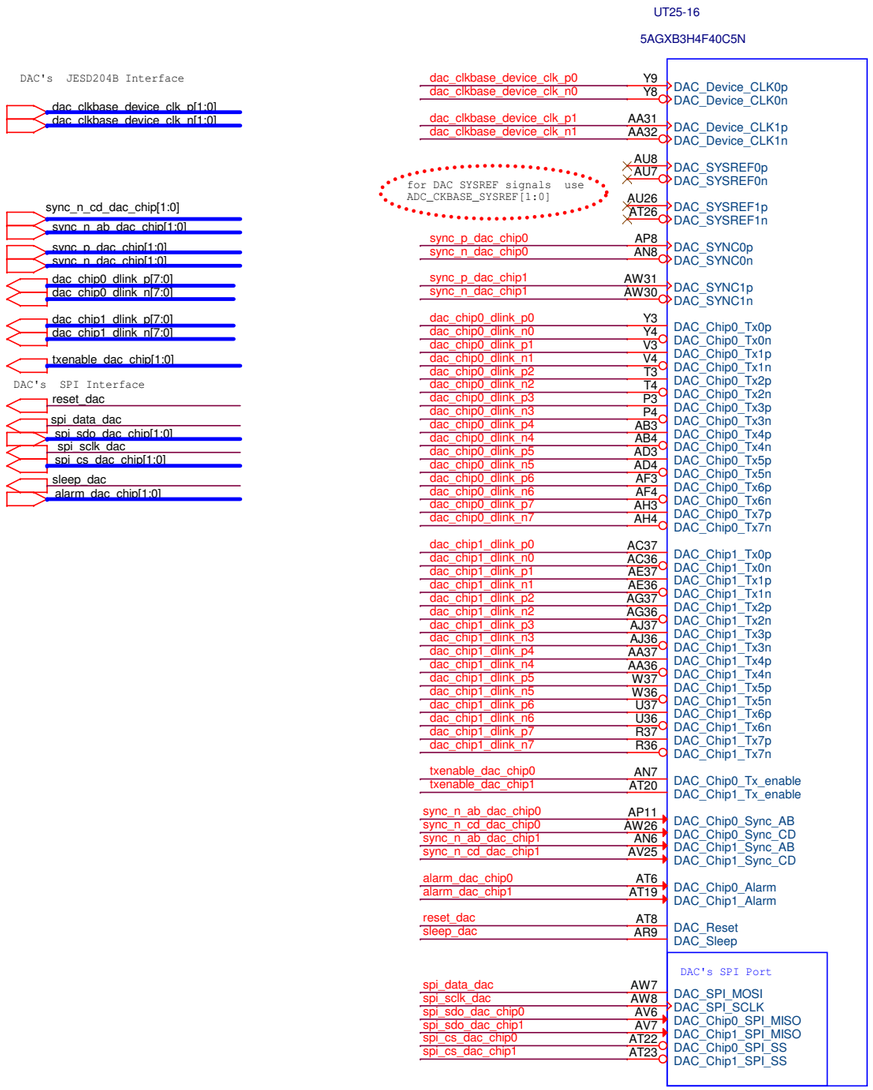


| Item No. | Part No. | Description or Size | Qty. Req. |
|---|---|---|---|

Parts List

| Unless Otherwise Specified | | | Originator | A.Semenov | 07.24.2019 |
|---|---|---|---|---|---|
| Fractions | Decimals | Angles | Drawn | A.Semenov | 07.25.2019 |
| + - | + - | + - | Checked | N.Eddy | 07.25.2019 |
| 1. Break all sharp edges 1/64" maximum.<br>2. Do not scale drawing.<br>3. Dimensioning in accord with ANSI Y14.5 standards. | | | Approved | N.Eddy | 07.25.2019 |
| | | | Used On | | |
| Max. all machined surfaces | | | Material | | |

FERMI NATIONAL ACCELERATOR LABORATORY
UNITED STATES DEPARTMENT OF ENERGY

VME_VXS_DDamper_1GHz
ADC's Port
Schematic

| Scale | Software | Drawing Number | Rev |
|---|---|---|---|
| | OrCAD Capture Version 17.2 | 0880-ED-417250 | 0 |

Date: Monday, July 29, 2019 Sheet 23 of 46

# Decoupling FPGA

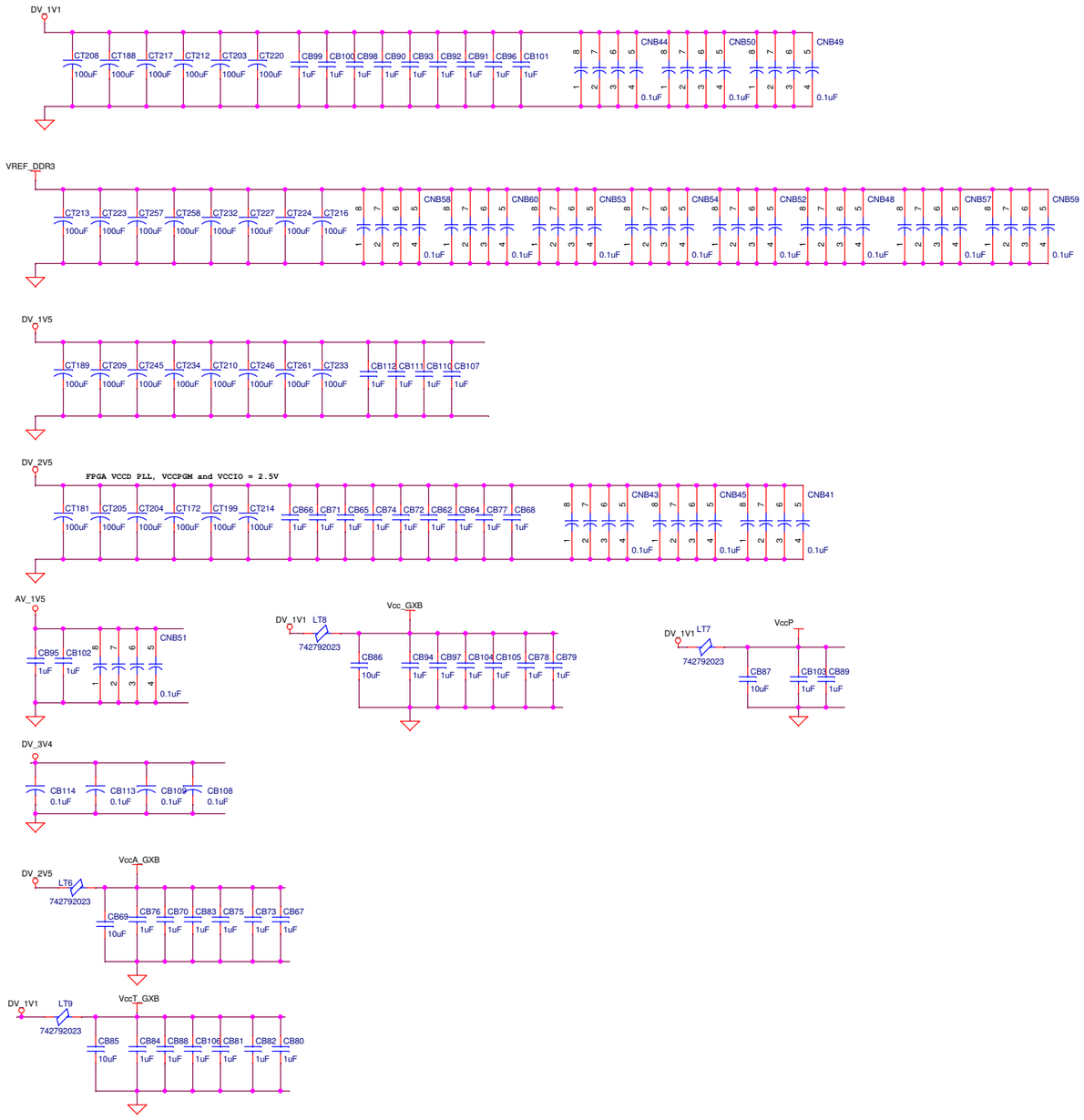


| Item No. | Part No. | Description or Size | Qty. Req. |
|---|---|---|---|
| Parts List | | | |

| Unless Otherwise Specified | | | Originator | A.Semenov | 07.24.2019 |
|---|---|---|---|---|---|
| Fractions | Decimals | Angles | Drawn | A.Semenov | 07.25.2019 |
| + - | + - | + - | Checked | N.Eddy | 07.25.2019 |
| 1. Break all sharp edges 1/64" maximum.<br>2. Do not scale drawing.<br>3. Dimensioning in accord with ANSI Y14.5 standards. | | | Approved | N.Eddy | 07.25.2019 |
| | | | Used On | | |
| Max. all machined surfaces | | | Material | | |

FERMI NATIONAL ACCELERATOR LABORATORY
UNITED STATES DEPARTMENT OF ENERGY

VME_VXS_DDamper_1GHz
FPGA Power Decoupling
Schematic

| Scale | Software | Drawing Number | Rev |
|---|---|---|---|
| | OrCAD Capture Version 17.2 | 0880-ED-417250 | 0 |

Date: Monday, July 29, 2019 | Sheet 24 of 46

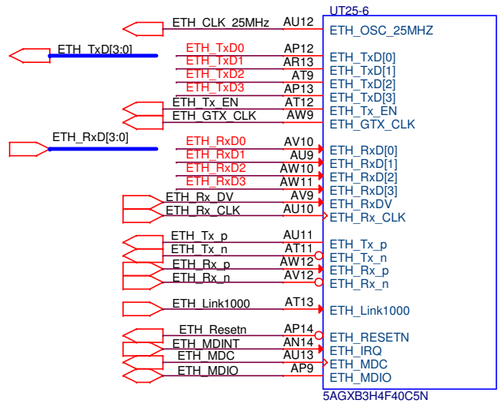


| Item No. | Part No. | Description or Size | Qty. Req. |
|---|---|---|---|
| Parts List | | | |

| Unless Otherwise Specified | | | Originator | A.Semenov | 07.24.2019 |
|---|---|---|---|---|---|
| Fractions | Decimals | Angles | Drawn | A.Semenov | 07.25.2019 |
| + - | + - | + - | Checked | N.Eddy | 07.25.2019 |
| 1. Break all sharp edges 1/64" maximum.<br>2. Do not scale drawing.<br>3. Dimensioning in accord with ANSI Y14.5 standards.<br>√ Max. all machined surfaces | | | Approved | N.Eddy | 07.25.2019 |
| | | | Used On | | |
| | | | Material | | |

FERMI NATIONAL ACCELERATOR LABORATORY
UNITED STATES DEPARTMENT OF ENERGY

VME_VXS_DDamper_1GHz
VXS 1000Mbit Ethernet Port
Schematic

| Scale | Software | Drawing Number | Rev |
|---|---|---|---|
| | OrCAD Capture Version 17.2 | 0880-ED-417250 | 0 |

Date: Monday, July 29, 2019 Sheet 25 of 46

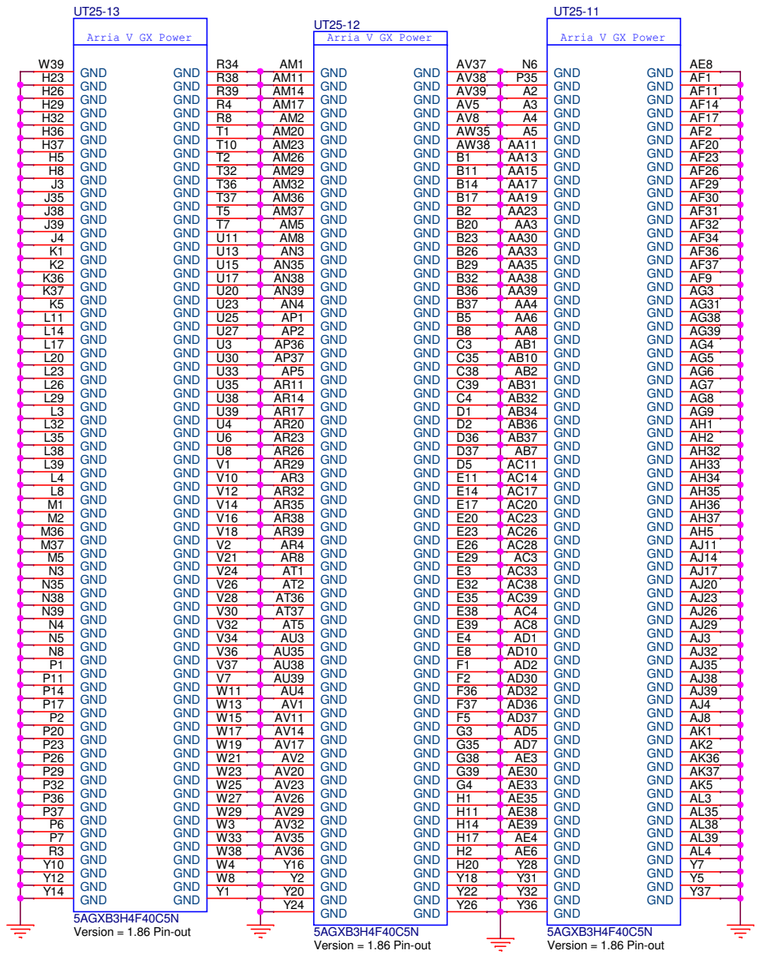


| Item No. | Part No. | Description or Size | Qty. Req. |
|---|---|---|---|
| Parts List | | | |

| Unless Otherwise Specified | | | Originator | A.Semenov | 07.24.2019 |
|---|---|---|---|---|---|
| Fractions | Decimals | Angles | Drawn | A.Semenov | 07.25.2019 |
| + - | + - | + - | Checked | N.Eddy | 07.25.2019 |
| 1. Break all sharp edges 1/64" maximum.<br>2. Do not scale drawing.<br>3. Dimensioning in accord with ANSI Y14.5 standards. | | | Approved | N.Eddy | 07.25.2019 |
| | | | Used On | | |
| Max. all machined surfaces | | | Material | | |

FERMI NATIONAL ACCELERATOR LABORATORY
UNITED STATES DEPARTMENT OF ENERGY

VME_VXS_DDamper_1GHz
ADC's FPGA : GND Pins
Schematic

| Scale | Software | Drawing Number | Rev |
|---|---|---|---|
| | OrCAD Capture Version 17.2 | 0880-ED-417250 | 0 |

Date: Monday, July 29, 2019 | Sheet 26 of 46

# Power - Arria V GX Power

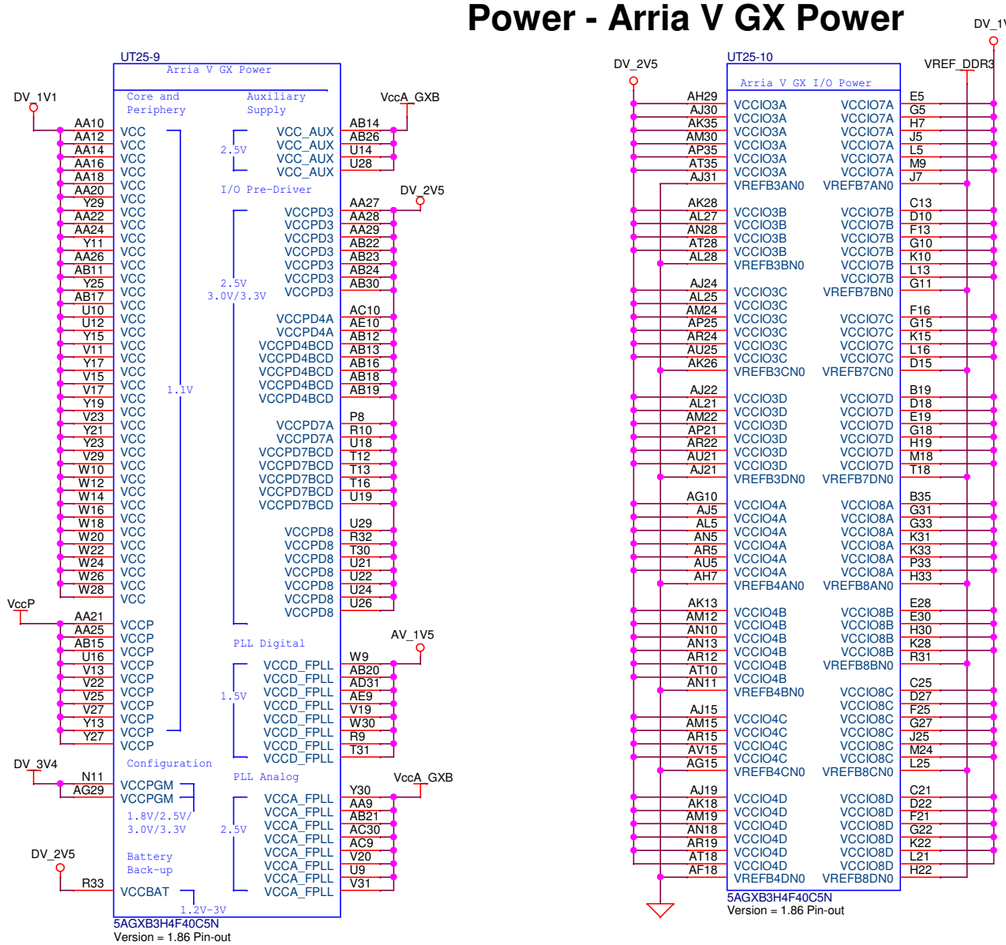





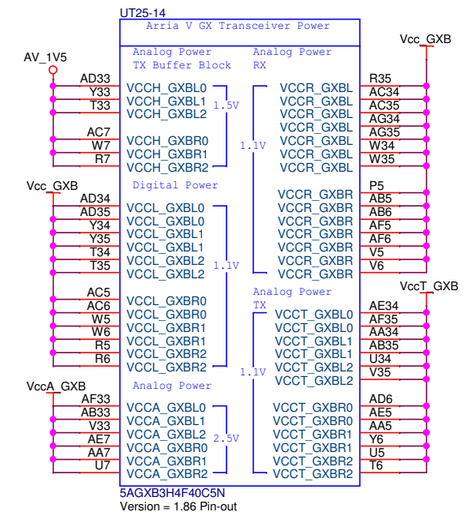


| Item No. | Part No. | Description or Size | Qty. Req. |
|---|---|---|---|
| Parts List | | | |

| Unless Otherwise Specified | | | Originator | A.Semenov | 07.24.2019 |
|---|---|---|---|---|---|
| Fractions | Decimals | Angles | Drawn | A.Semenov | 07.25.2019 |
| + - | + - | + - | Checked | N.Eddy | 07.25.2019 |
| 1. Break all sharp edges 1/64" maximum.<br>2. Do not scale drawing.<br>3. Dimensioning in accord with ANSI Y14.5 standards. | | | Approved | N.Eddy | 07.25.2019 |
| | | | Used On | | |
| Max. all machined surfaces | | | Material | | |

FERMI NATIONAL ACCELERATOR LABORATORY
UNITED STATES DEPARTMENT OF ENERGY

VME_VXS_DDamper_1GHz
ADC's FPGA : Power Pins
Schematic

| Scale | Software | Drawing Number | Rev |
|---|---|---|---|
| | OrCAD Capture Version 17.2 | 0880-ED-417250 | 0 |

Date: Monday, July 29, 2019 | Sheet 27 of 46

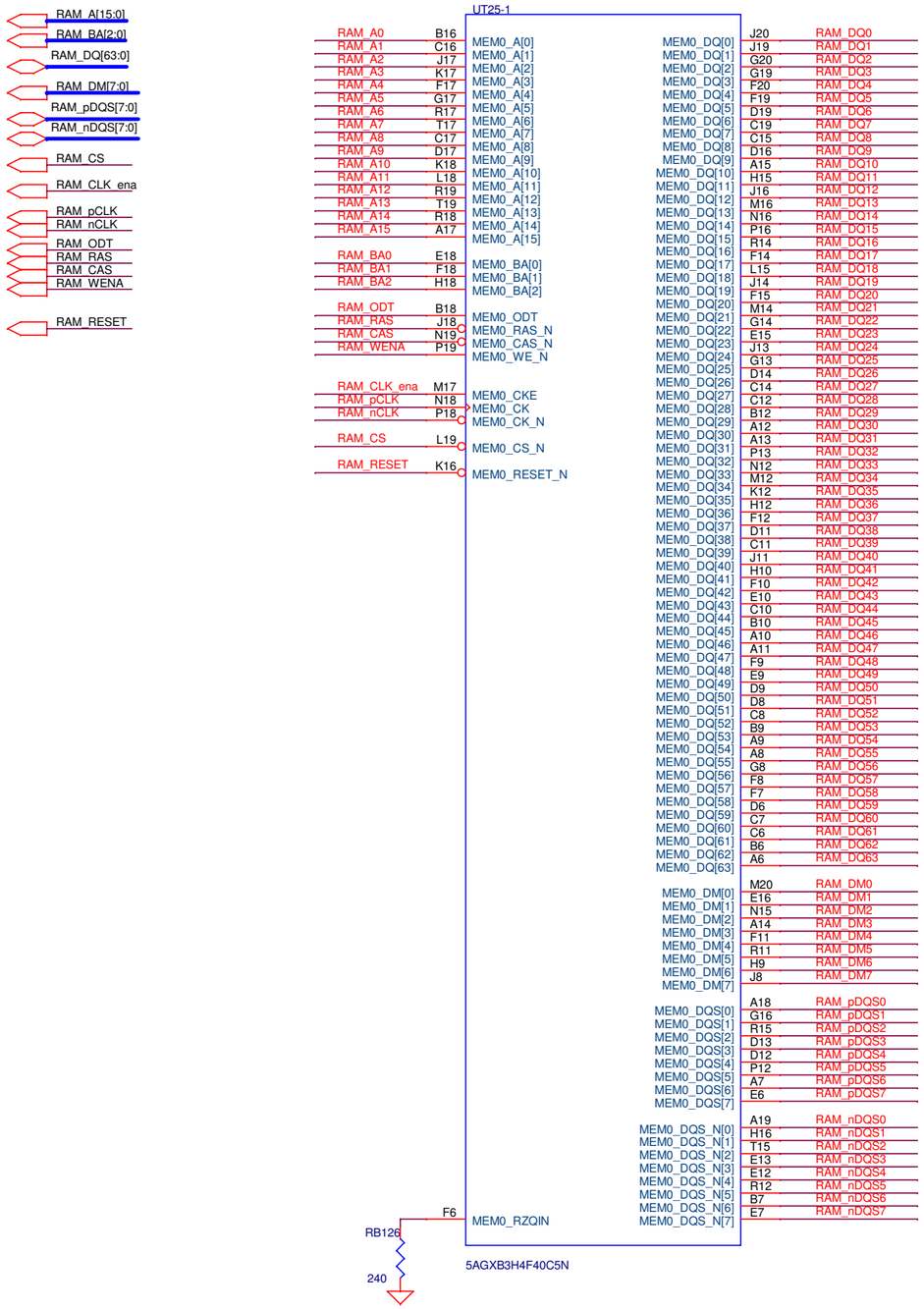


| Item No. | Part No. | Description or Size | Qty. Req. |
|---|---|---|---|
| Parts List | | | |

| Unless Otherwise Specified | | | Originator | A.Semenov | 07.24.2019 |
|---|---|---|---|---|---|
| Fractions | Decimals | Angles | Drawn | A.Semenov | 07.25.2019 |
| + - | + - | + - | Checked | N.Eddy | 07.25.2019 |
| 1. Break all sharp edges 1/64" maximum.<br>2. Do not scale drawing.<br>3. Dimensioning in accord with ANSI Y14.5 standards. | | | Approved | N.Eddy | 07.25.2019 |
| | | | Used On | | |
| Max. all machined surfaces | | | Material | | |

FERMI NATIONAL ACCELERATOR LABORATORY
UNITED STATES DEPARTMENT OF ENERGY

VME_VXS_DDamper_1GHz
FPGA : DDR3 Ports
Schematic

| Scale | Software | Drawing Number | Rev |
|---|---|---|---|
| | OrCAD Capture Version 17.2 | 0880-ED-417250 | 0 |

Date: Monday, July 29, 2019 | Sheet 28 of 46

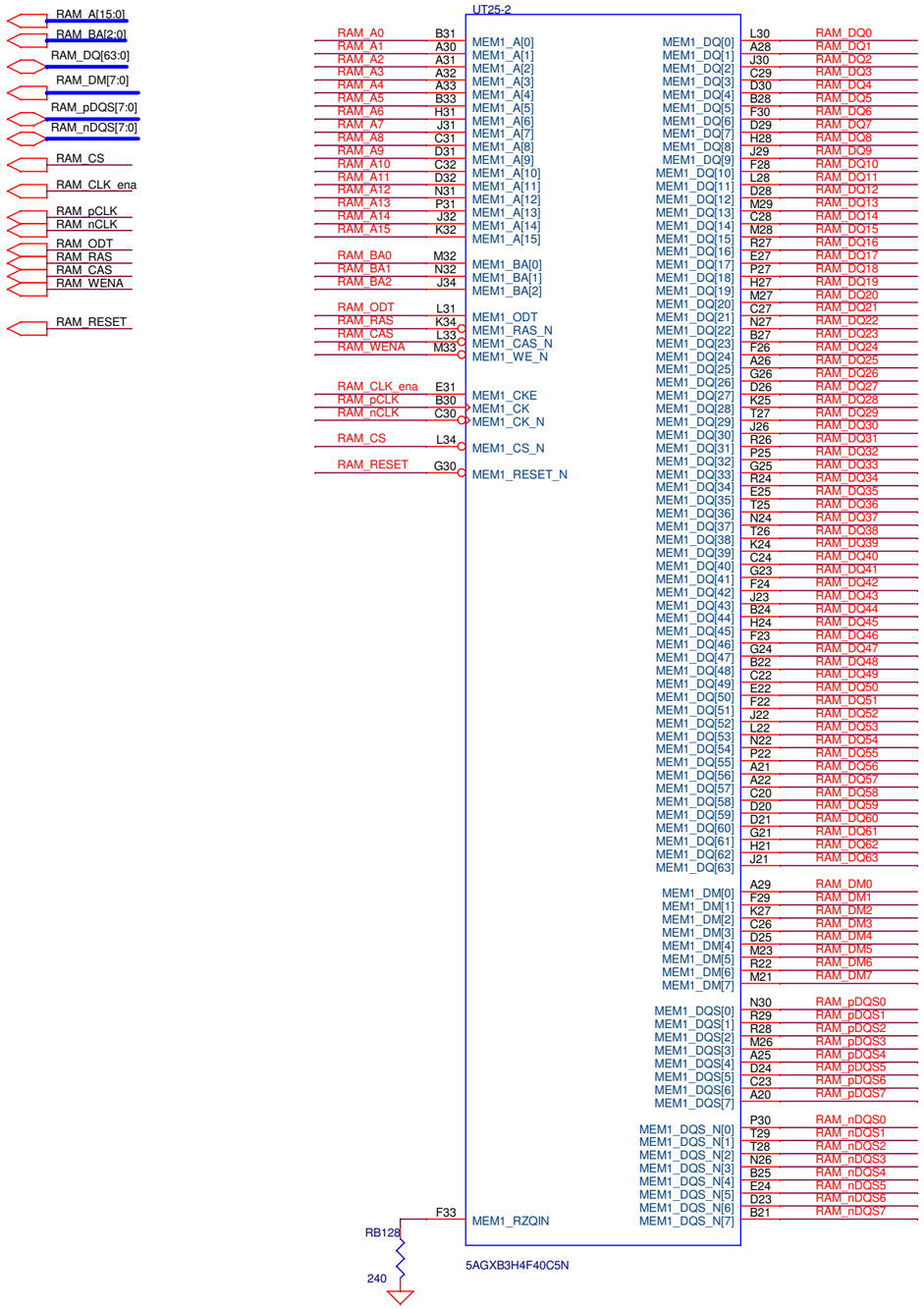


| Item No. | Part No. | Description or Size | Qty. Req. |
|---|---|---|---|
| Parts List | | | |

| Unless Otherwise Specified | | | Originator | A.Semenov | 07.24.2019 |
|---|---|---|---|---|---|
| Fractions | Decimals | Angles | Drawn | A.Semenov | 07.25.2019 |
| + - | + - | + - | Checked | N.Eddy | 07.25.2019 |
| 1. Break all sharp edges 1/64" maximum.<br>2. Do not scale drawing.<br>3. Dimensioning in accord with ANSI Y14.5 standards. | | | Approved | N.Eddy | 07.25.2019 |
| | | | Used On | | |
| Max. all machined surfaces | | | Material | | |

FERMI NATIONAL ACCELERATOR LABORATORY
UNITED STATES DEPARTMENT OF ENERGY

VME_VXS_DDamper_1GHz
FPGA : DDR3 Ports
Schematic

| Scale | Software | Drawing Number | Rev |
|---|---|---|---|
| | OrCAD Capture Version 17.2 | 0880-ED-417250 | 0 |

Date: Monday, July 29, 2019 | Sheet 29 of 46

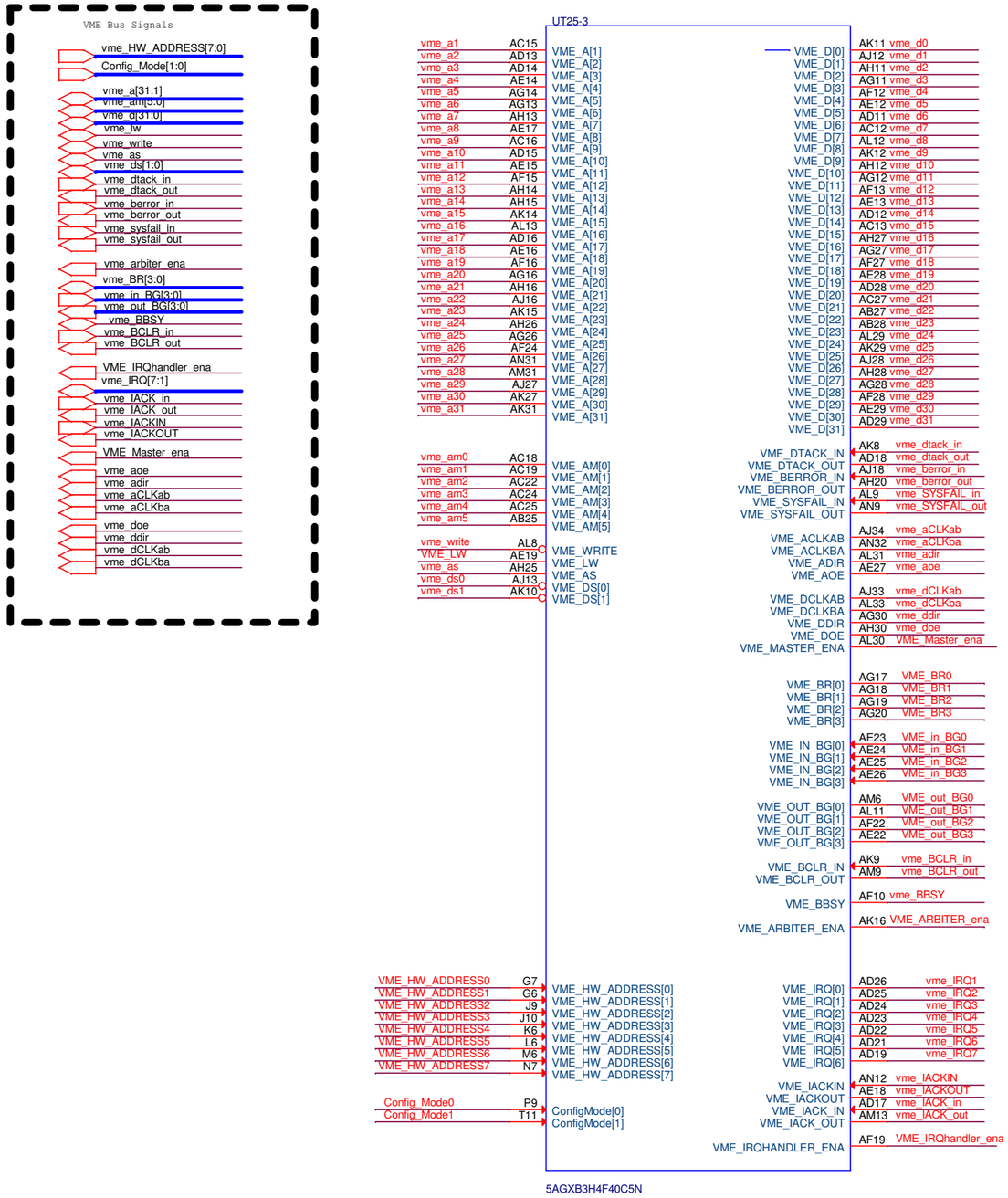


| Item No. | Part No. | Description or Size | Qty. Req. |
|---|---|---|---|
| Parts List | | | |

| Unless Otherwise Specified | | | Originator | A.Semenov | 07.24.2019 |
|---|---|---|---|---|---|
| Fractions | Decimals | Angles | Drawn | A.Semenov | 07.25.2019 |
| + - | + - | + - | Checked | N.Eddy | 07.25.2019 |
| 1. Break all sharp edges 1/64" maximum.<br>2. Do not scale drawing.<br>3. Dimensioning in accord with ANSI Y14.5 standards. | | | Approved | N.Eddy | 07.25.2019 |
| | | | Used On | | |
| √ Max. all machined surfaces | | | Material | | |

FERMI NATIONAL ACCELERATOR LABORATORY
UNITED STATES DEPARTMENT OF ENERGY

VME_VXS_DDamper_1GHz
VME_VXS_FPGA. VME Port
Schematic

| Scale | Software | Drawing Number | Rev |
|---|---|---|---|
| | OrCAD Capture Version 17.2 | 0880-ED-417250 | 0 |

Date: Monday, July 29, 2019 Sheet 30 of 46

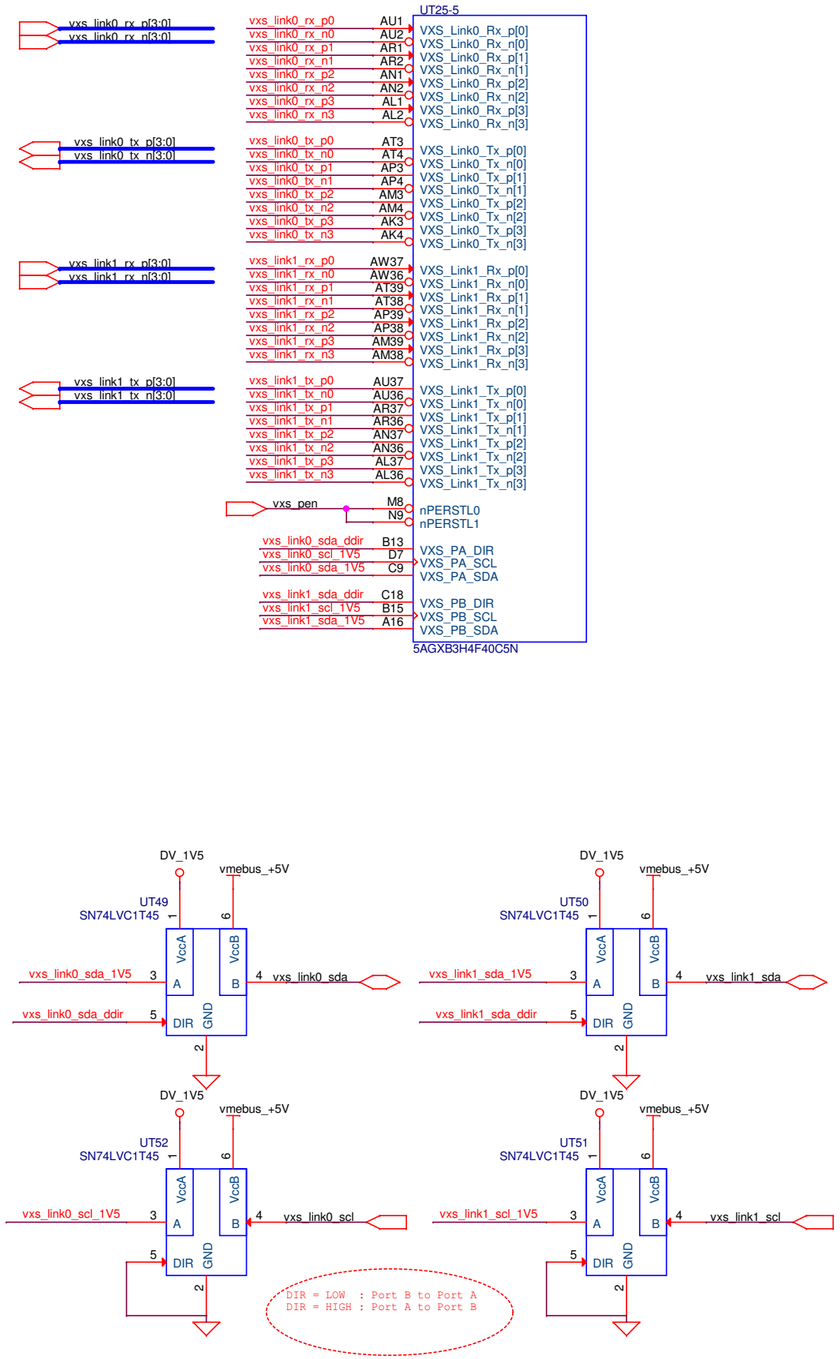


| Item No. | Part No. | Description or Size | Qty. Req. |
|---|---|---|---|
| Parts List | | | |

| Unless Otherwise Specified | | | Originator | A.Semenov | 07.24.2019 |
|---|---|---|---|---|---|
| Fractions | Decimals | Angles | Drawn | A.Semenov | 07.25.2019 |
| + - | + - | + - | Checked | N.Eddy | 07.25.2019 |
| 1. Break all sharp edges 1/64" maximum.<br>2. Do not scale drawing.<br>3. Dimensioning in accord with ANSI Y14.5 standards. | | | Approved | N.Eddy | 07.25.2019 |
| | | | Used On | | |
| √ Max. all machined surfaces | | | Material | | |

FERMI NATIONAL ACCELERATOR LABORATORY
UNITED STATES DEPARTMENT OF ENERGY

VME_VXS_DDamper_1GHz
VXS 2 LInks Port
Schematic

| Scale | Software | Drawing Number | Rev |
|---|---|---|---|
| | OrCAD Capture Version 17.2 | 0880-ED-417250 | 0 |

Date: Monday, July 29, 2019 Sheet 31 of 46

| Item No. | Part No. | Description or Size | Qty. Req. |
|---|---|---|---|
| Parts List | | | |

| Unless Otherwise Specified | | | Originator | A.Semenov | 07.24.2019 |
|---|---|---|---|---|---|
| Fractions | Decimals | Angles | Drawn | A.Semenov | 07.25.2019 |
| ± | ± | ± | Checked | N.Eddy | 07.25.2019 |
| 1. Break all sharp edges 1/64" maximum.<br>2. Do not scale drawing.<br>3. Dimensioning in accord with ANSI Y14.5 standards. | | | Approved | N.Eddy | 07.25.2019 |
| | | | Used On | | |
| √ Max. all machined surfaces | | | Material | | |

FERMI NATIONAL ACCELERATOR LABORATORY
UNITED STATES DEPARTMENT OF ENERGY

VME_VXS_DDamper_1GHz
FPGA XMC Port
Schematic

| Scale | Software | Drawing Number | Rev |
|---|---|---|---|
| | OrCAD Capture Version 17.2 | 0880-ED-417250 | 0 |

Date: Monday, July 29, 2019 Sheet 32 of 46

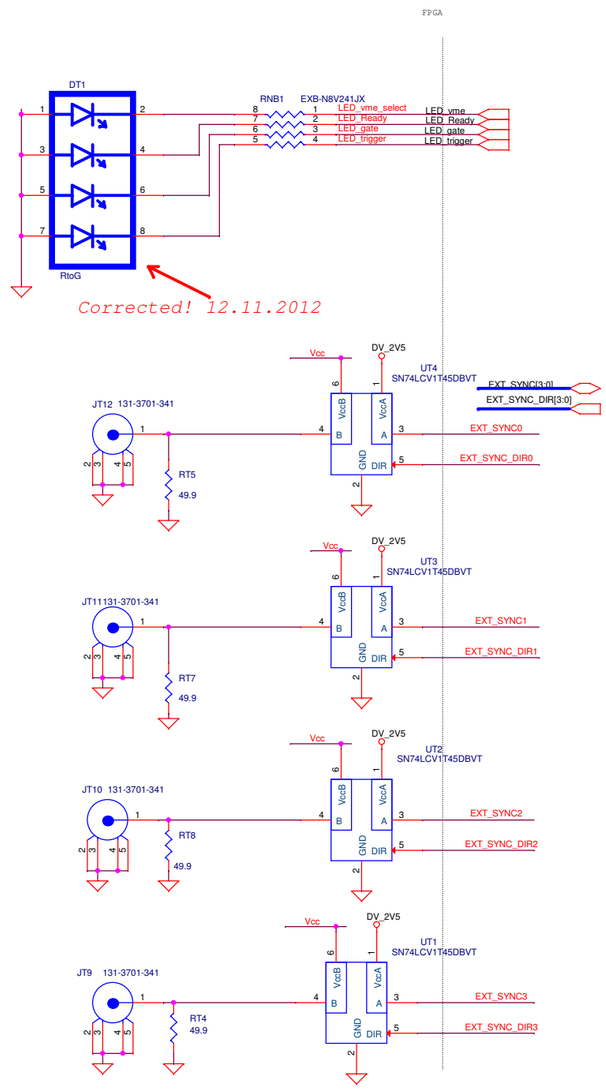


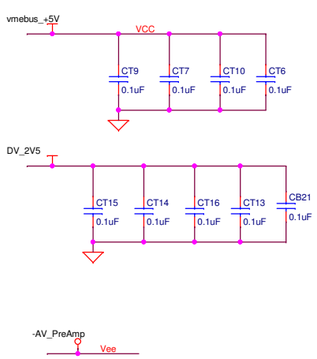


| Item No. | Part No. | Description or Size | Qty. Req. |
|---|---|---|---|
| Parts List | | | |

| Unless Otherwise Specified | | | Originator | A.Semenov | 07.24.2019 |
|---|---|---|---|---|---|
| Fractions | Decimals | Angles | Drawn | A.Semenov | 07.25.2019 |
| ± | ± | ± | Checked | N.Eddy | 07.25.2019 |
| 1. Break all sharp edges 1/64" maximum.<br>2. Do not scale drawing.<br>3. Dimensioning in accord with ANSI Y14.5 standards. | | | Approved | N.Eddy | 07.25.2019 |
| | | | Used On | | |
| Max. all machined surfaces | | | Material | | |

FERMI NATIONAL ACCELERATOR LABORATORY
UNITED STATES DEPARTMENT OF ENERGY

VME_VXS_DDamper_1GHz
FrontEnd IO Drivers
Schematic

| Scale | Software | Drawing Number | Rev |
|---|---|---|---|
| | OrCAD Capture Version 17.2 | 0880-ED-417250 | 0 |

Date: Monday, July 29, 2019 Sheet 33 of 46

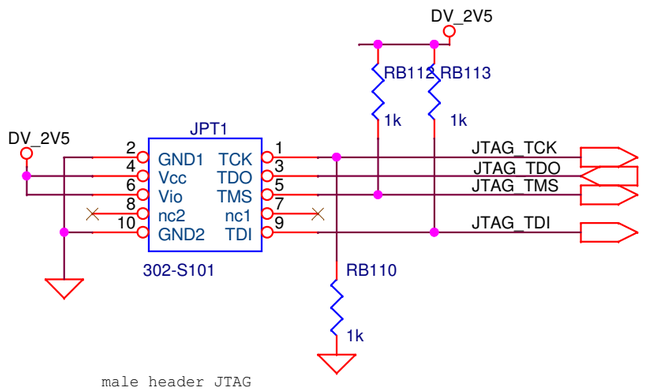


```
male header JTAG
connections:
pin#    jtag
1       TCK
2       GND
3       TDO
4       Vcc
5       TMS
6       Vccio
7       (NC)
8       (NC)
9      TDI
10     GND
```

| Item No. | Part No. | Description or Size | Qty. Req. |
|---|---|---|---|

Parts List

| Unless Otherwise Specified | | | Originator | A.Semenov | 07.24.2019 |
|---|---|---|---|---|---|
| Fractions | Decimals | Angles | Drawn | A.Semenov | 07.25.2019 |
| + - | + - | + - | Checked | N.Eddy | 07.25.2019 |
| | | | Approved | N.Eddy | 07.25.2019 |

1. Break all sharp edges 1/64" maximum.
2. Do not scale drawing.
3. Dimensioning in accord with ANSI Y14.5 standards.

√ Max. all machined surfaces

Used On

Material

FERMI NATIONAL ACCELERATOR LABORATORY
UNITED STATES DEPARTMENT OF ENERGY

VME_VXS_DDamper_1GHz
FPGA JTAG Interface
Schematic

| Scale | Software | Drawing Number | Rev |
|---|---|---|---|
| | OrCAD Capture Version 17.2 | 0880-ED-417250 | 0 |

Date: Monday, July 29, 2019

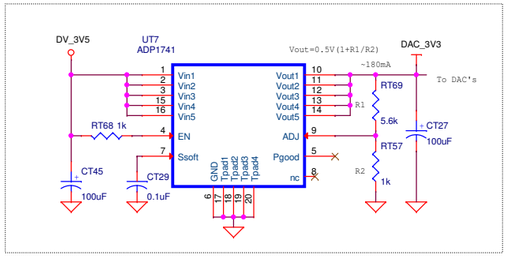


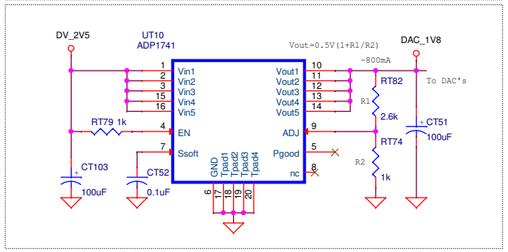


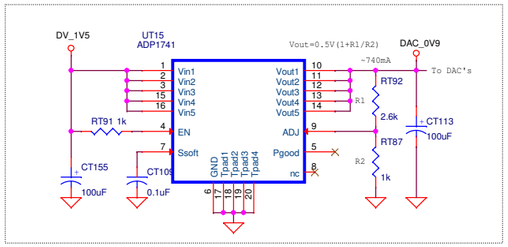


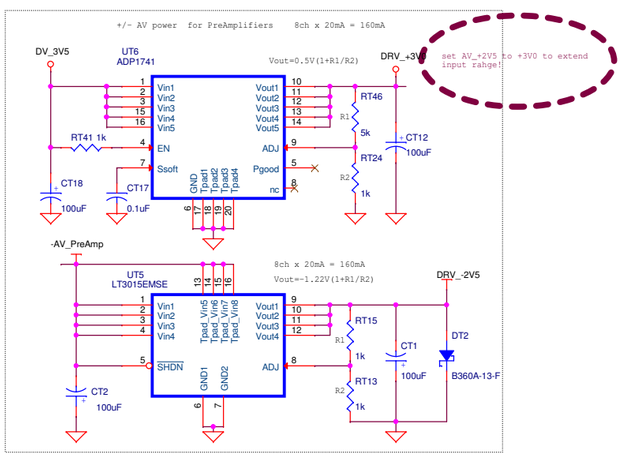


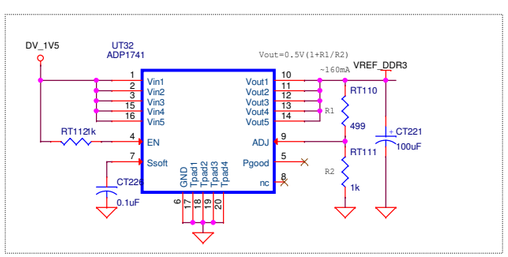


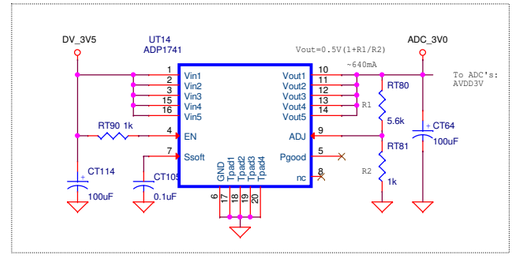


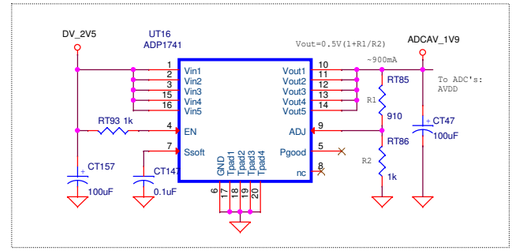


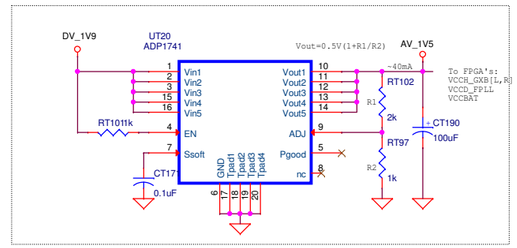


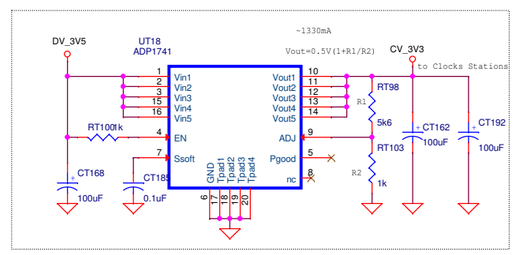


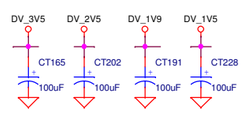


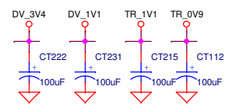


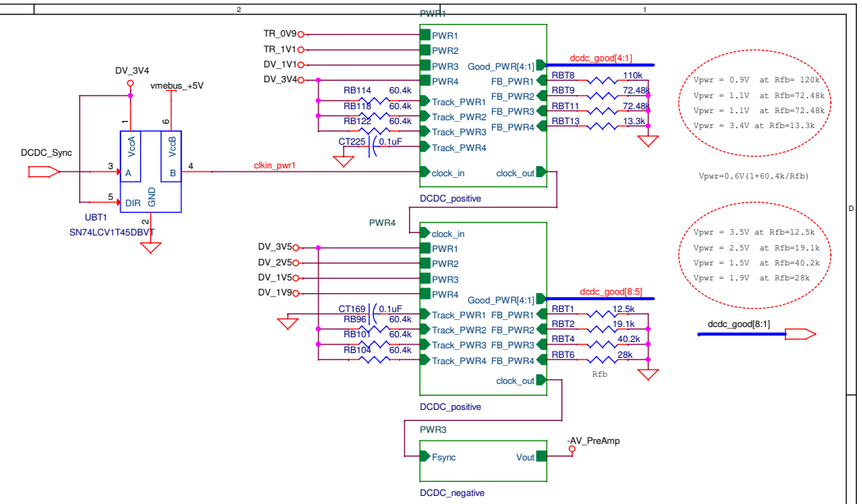


*Power Consumption:*

*0. DAC's:*

*VDD3.3 : 3.3V, 64(80max)mA => 160mA, 528mW*
*VDD1.8 : 1.8V, 44(90max)mA => 180mA,324mW*
*VDD0.9 : 0.9V,844 (1040max)mA =>2080mA,1872mW*
*Total: 2.724W*

*1. ADC's:*

*AVDD : 1.9V, 359(510max)mA => 1020mA, 1938mW*
*AVDD3V : 3.0V, 334(360max)mA => 720mA,2160mW*
*DVDD : 1.9V, 197(260max)mA => 520mA, 988mW*
*IOVDD : 1.15V,566(920max)mA => 1840mA, 1036mW*
*Total: 6.11W(max)*

*2. ADC's & System Clocks:*

*Vcc : 3.3V, 565(665max)mA => 1330mA, 4.4W*

*3. Preamp's:*

*AVPAp : 3.3V, 8ch x 20mA = 160mA, 528mW*
*AVPAn : -3.3V, 8ch x 20mA = 160mA, 528mW*

*4. RAM DDR3:*

*Vcc : 1.5V, 220(380max)mA => 3040mA, 4.56W*

*5. FPGA's:*

*Vcc_1.10V, 1284mA => 1412 mW*
*Vcc_1.15V, 805mA => 926 mW*
*Vcc_1.50V, 385mA => 577 mW*
*Vcc_2.50V, 1083mA => 2707 mW*
*Total: 5622 mW*

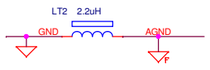


| Item No. | Part No. | Description or Size | Qty. Req. |
|---|---|---|---|

Parts List

| Unless Otherwise Specified | | | Originator | A.Semenov | 07.24.2019 |
|---|---|---|---|---|---|
| Fractions | Decimals | Angles | Drawn | A.Semenov | 07.25.2019 |
| + - | + - | + - | Checked | N.Eddy | 07.25.2019 |
| 1. Break all sharp edges 1/64" maximum. 2. Do not scale drawing. 3. Dimensioning in accord with ANSI Y14.5 standards. | | | Approved | N.Eddy | 07.25.2019 |
| | | | Used On | | |
| Max. all machined surfaces | | | Material | | |

FERMI NATIONAL ACCELERATOR LABORATORY
UNITED STATES DEPARTMENT OF ENERGY

VME_VXS_DDamper_1GHz
Voltages Converters
Schematic

| Scale | Software | Drawing Number | Rev |
|---|---|---|---|
| | OrCAD Capture Version 17.2 | 0880-ED-417250 | 0 |

Date: Monday, July 29, 2019 Sheet 35 of 46

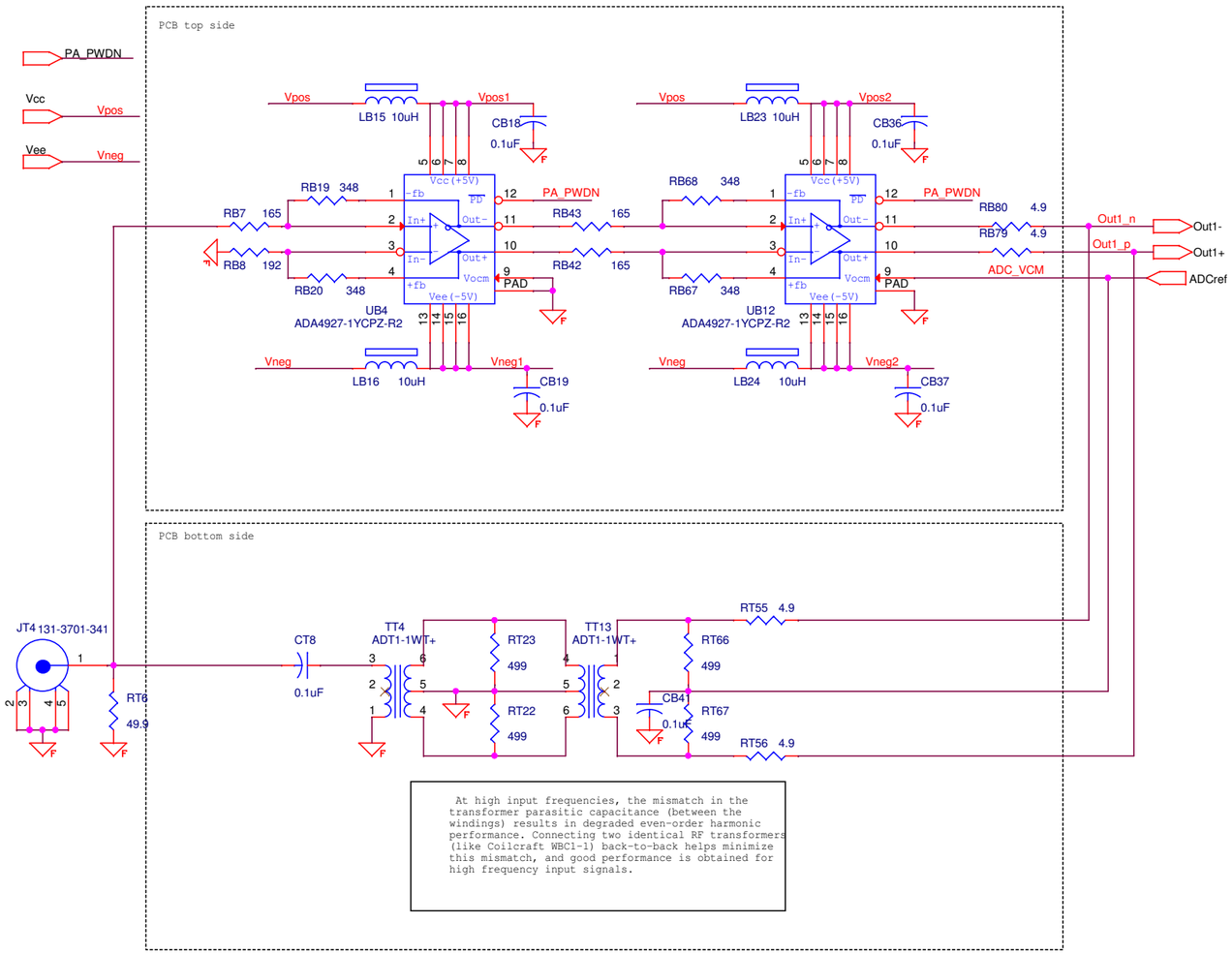


| Item No. | Part No. | Description or Size | Qty. Req. |
|---|---|---|---|
| Parts List | | | |

| Unless Otherwise Specified | | | Originator | A.Semenov | 07.24.2019 |
|---|---|---|---|---|---|
| Fractions | Decimals | Angles | Drawn | A.Semenov | 07.25.2019 |
| + - | + - | + - | Checked | N.Eddy | 07.25.2019 |
| 1. Break all sharp edges 1/64" maximum.<br>2. Do not scale drawing.<br>3. Dimensioning in accord with ANSI Y14.5 standards.<br>Max. all machined surfaces | | | Approved | N.Eddy | 07.25.2019 |
| | | | Used On | | |
| | | | Material | | |

FERMI NATIONAL ACCELERATOR LABORATORY
UNITED STATES DEPARTMENT OF ENERGY

VME_VXS_DDamper_1GHz
PreAmplifier Stage
Schematic

| Scale | Software | Drawing Number | Rev |
|---|---|---|---|
| | OrCAD Capture Version 17.2 | 0880-ED-417250 | 0 |

Date: Monday, July 29, 2019 | Sheet 36 of 46

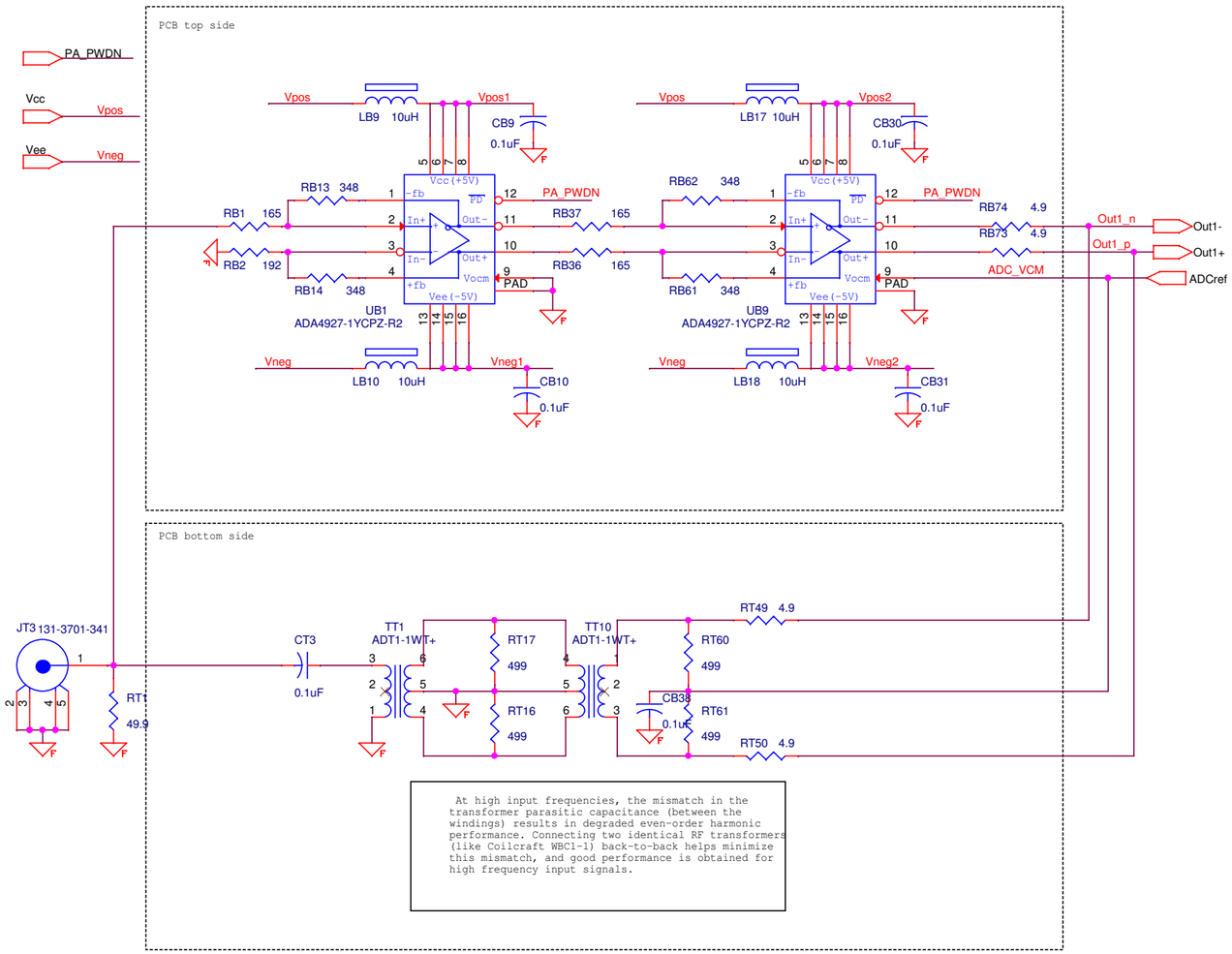


| Item No. | Part No. | Description or Size | Qty. Req. |
|---|---|---|---|

Parts List

| Unless Otherwise Specified | | | Originator | A.Semenov | 07.24.2019 |
|---|---|---|---|---|---|
| Fractions | Decimals | Angles | Drawn | A.Semenov | 07.25.2019 |
| + - | + - | + - | Checked | N.Eddy | 07.25.2019 |
| 1. Break all sharp edges 1/64" maximum.<br>2. Do not scale drawing.<br>3. Dimensioning in accord with ANSI Y14.5 standards. | | | Approved | N.Eddy | 07.25.2019 |
| | | | Used On | | |
| √ Max. all machined surfaces | | | Material | | |

FERMI NATIONAL ACCELERATOR LABORATORY
UNITED STATES DEPARTMENT OF ENERGY

VME_VXS_DDamper_1GHz
PreAmplifier Stage
Schematic

| Scale | Software | Drawing Number | Rev |
|---|---|---|---|
| | OrCAD Capture Version 17.2 | 0880-ED-417250 | 0 |

Date: Monday, July 29, 2019 | Sheet 37 of 46

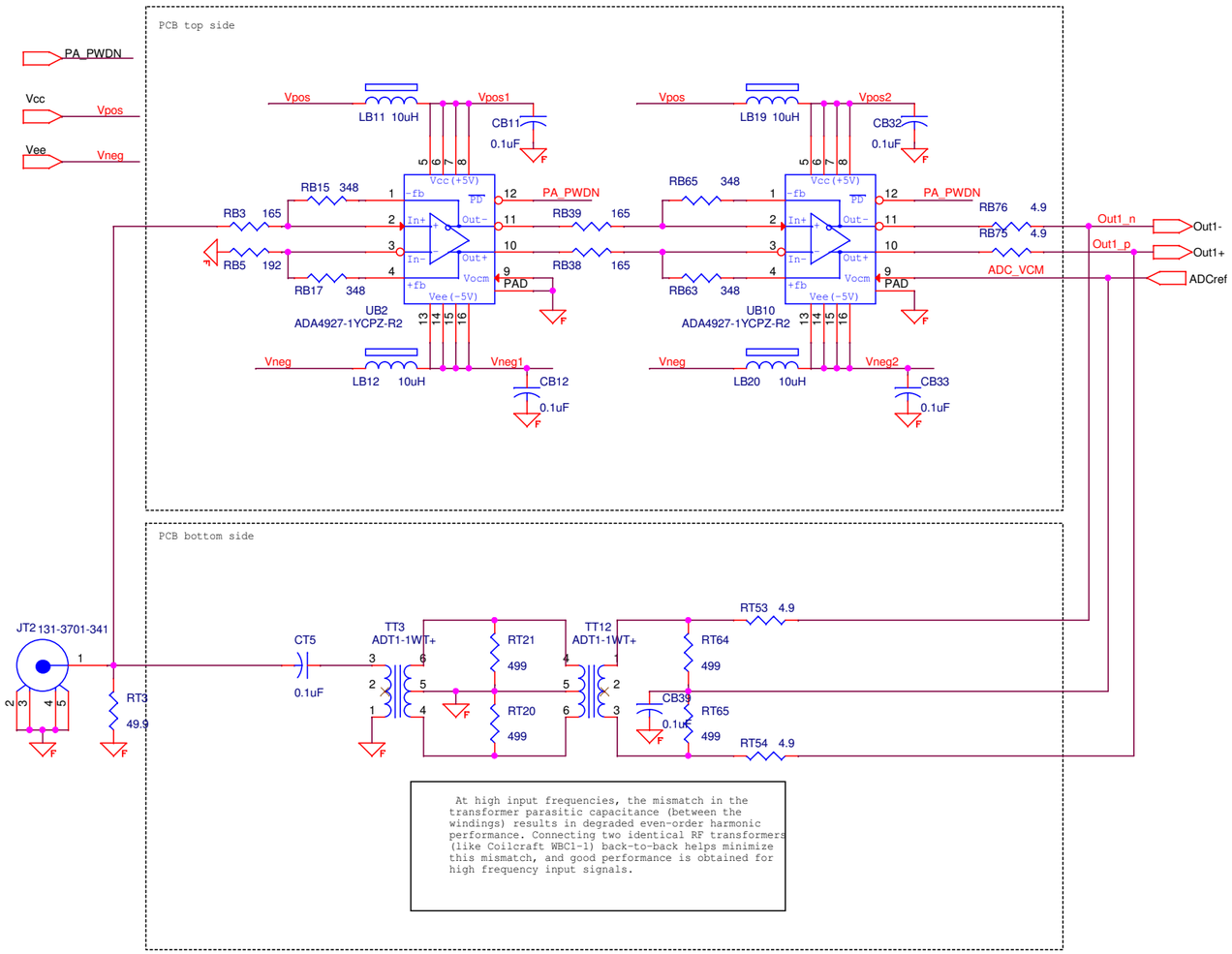


| Item No. | Part No. | Description or Size | Qty. Req. |
|---|---|---|---|
| Parts List | | | |

| Unless Otherwise Specified | | | Originator | A.Semenov | 07.24.2019 |
|---|---|---|---|---|---|
| Fractions | Decimals | Angles | Drawn | A.Semenov | 07.25.2019 |
| + - | + - | + - | Checked | N.Eddy | 07.25.2019 |
| 1. Break all sharp edges 1/64" maximum.<br>2. Do not scale drawing.<br>3. Dimensioning in accord with ANSI Y14.5 standards.<br>Max. all machined surfaces | | | Approved | N.Eddy | 07.25.2019 |
| | | | Used On | | |
| | | | Material | | |

FERMI NATIONAL ACCELERATOR LABORATORY
UNITED STATES DEPARTMENT OF ENERGY

VME_VXS_DDamper_1GHz
PreAmplifier Stage
Schematic

| Scale | Software | Drawing Number | Rev |
|---|---|---|---|
| | OrCAD Capture Version 17.2 | 0880-ED-417250 | 0 |

Date: Monday, July 29, 2019 | Sheet 38 of 46

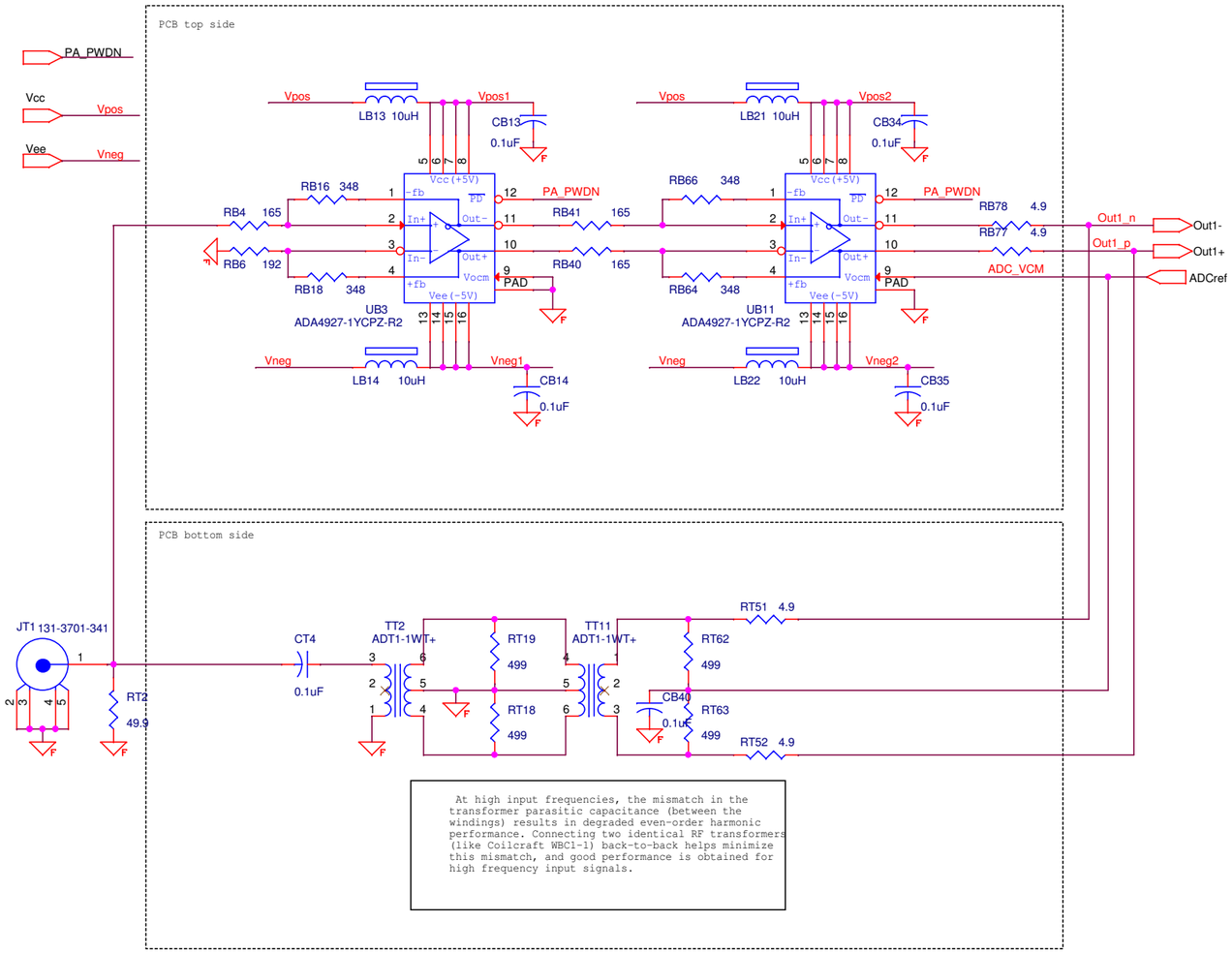


| Item No. | Part No. | Description or Size | Qty. Req. |
|---|---|---|---|
| Parts List | | | |

| Unless Otherwise Specified | | | Originator | A.Semenov | 07.24.2019 |
|---|---|---|---|---|---|
| Fractions | Decimals | Angles | Drawn | A.Semenov | 07.25.2019 |
| + - | + - | + - | Checked | N.Eddy | 07.25.2019 |
| 1. Break all sharp edges 1/64" maximum.<br>2. Do not scale drawing.<br>3. Dimensioning in accord with ANSI Y14.5 standards.<br>Max. all machined surfaces | | | Approved | N.Eddy | 07.25.2019 |
| | | | Used On | | |
| | | | Material | | |

FERMI NATIONAL ACCELERATOR LABORATORY
UNITED STATES DEPARTMENT OF ENERGY

VME_VXS_DDamper_1GHz
PreAmplifier Stage
Schematic

| Scale | Software | Drawing Number | Rev |
|---|---|---|---|
| | OrCAD Capture Version 17.2 | 0880-ED-417250 | 0 |

Date: Monday, July 29, 2019 | Sheet 39 of 46

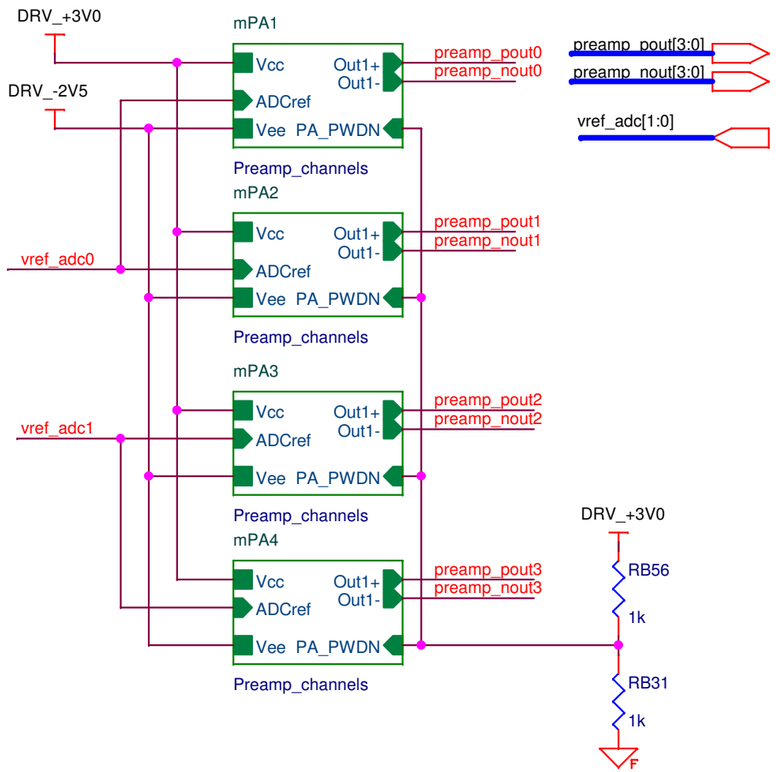


| Item No. | Part No. | Description or Size | Qty. Req. |
|---|---|---|---|

## Parts List

| Unless Otherwise Specified | | | Originator | A.Semenov | 07.24.2019 |
|---|---|---|---|---|---|
| Fractions | Decimals | Angles | Drawn | A.Semenov | 07.25.2019 |
| + - | + - | + - | Checked | N.Eddy | 07.25.2019 |
| | | | Approved | N.Eddy | 07.25.2019 |
| | | | Used On | | |
| | | | Material | | |

1. Break all sharp edges 1/64" maximum.
2. Do not scale drawing.
3. Dimensioning in accord with ANSI Y14.5 standards.

Max. all machined surfaces

FERMI NATIONAL ACCELERATOR LABORATORY
UNITED STATES DEPARTMENT OF ENERGY

VME_VXS_DDamper_1GHz
8 channels PreAmplifier
Schematic

| Scale | Software | Drawing Number | Rev |
|---|---|---|---|
| | OrCAD Capture Version 17.2 | 0880-ED-417250 | 0 |

Date: Monday, July 29, 2019 | Sheet 40 of 46

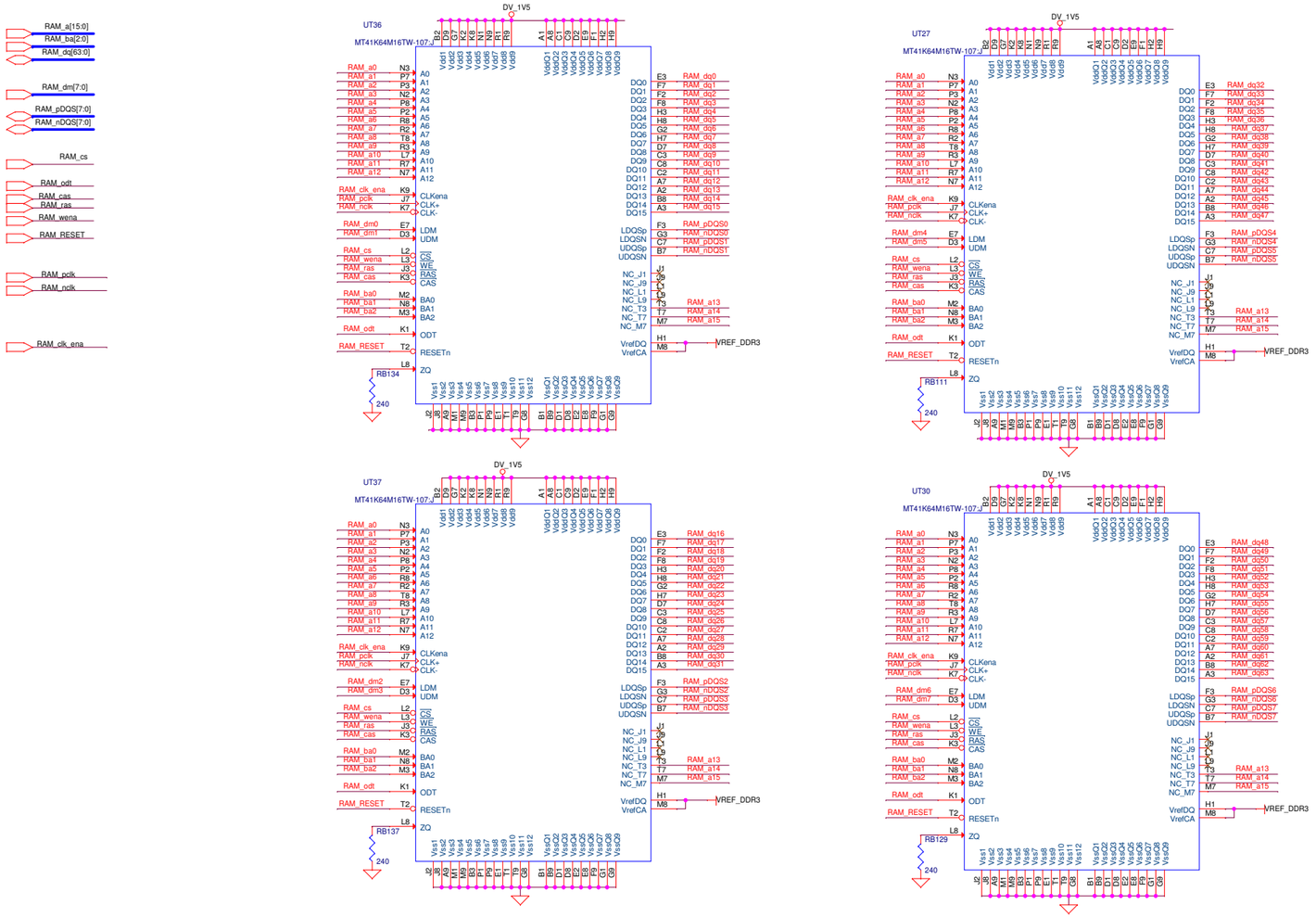


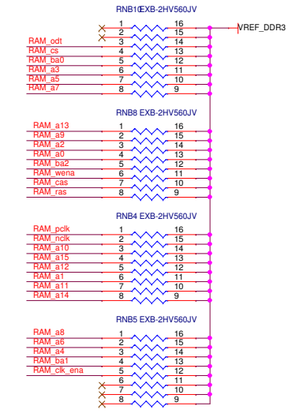


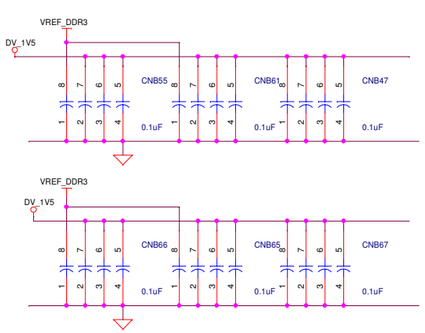


| Item No. | Part No. | Description or Size | Qty. Req. |
|---|---|---|---|

Parts List

| Unless Otherwise Specified | | | Originator | A.Semenov | 07.24.2019 |
|---|---|---|---|---|---|
| Fractions | Decimals | Angles | Drawn | A.Semenov | 07.25.2019 |
| + - | + - | + - | Checked | N.Eddy | 07.25.2019 |
| 1. Break all sharp edges 1/64" maximum. 2. Do not scale drawing. 3. Dimensioning in accord with ANSI Y14.5 standards. | | | Approved | N.Eddy | 07.25.2019 |
| | | | Used On | | |
| Max. all machined surfaces | | | Material | | |

FERMI NATIONAL ACCELERATOR LABORATORY
UNITED STATES DEPARTMENT OF ENERGY

VME_VXS_DDamper_1GHz
ADC's Module. DDR3 RAM 2x32Mx16bit

Schematic

| Scale | Software | Drawing Number | Rev |
|---|---|---|---|
| | OrCAD Capture Version 17.2 | 0880-ED-417250 | 0 |

Date: Monday, July 29, 2019 | Sheet 41 of 46

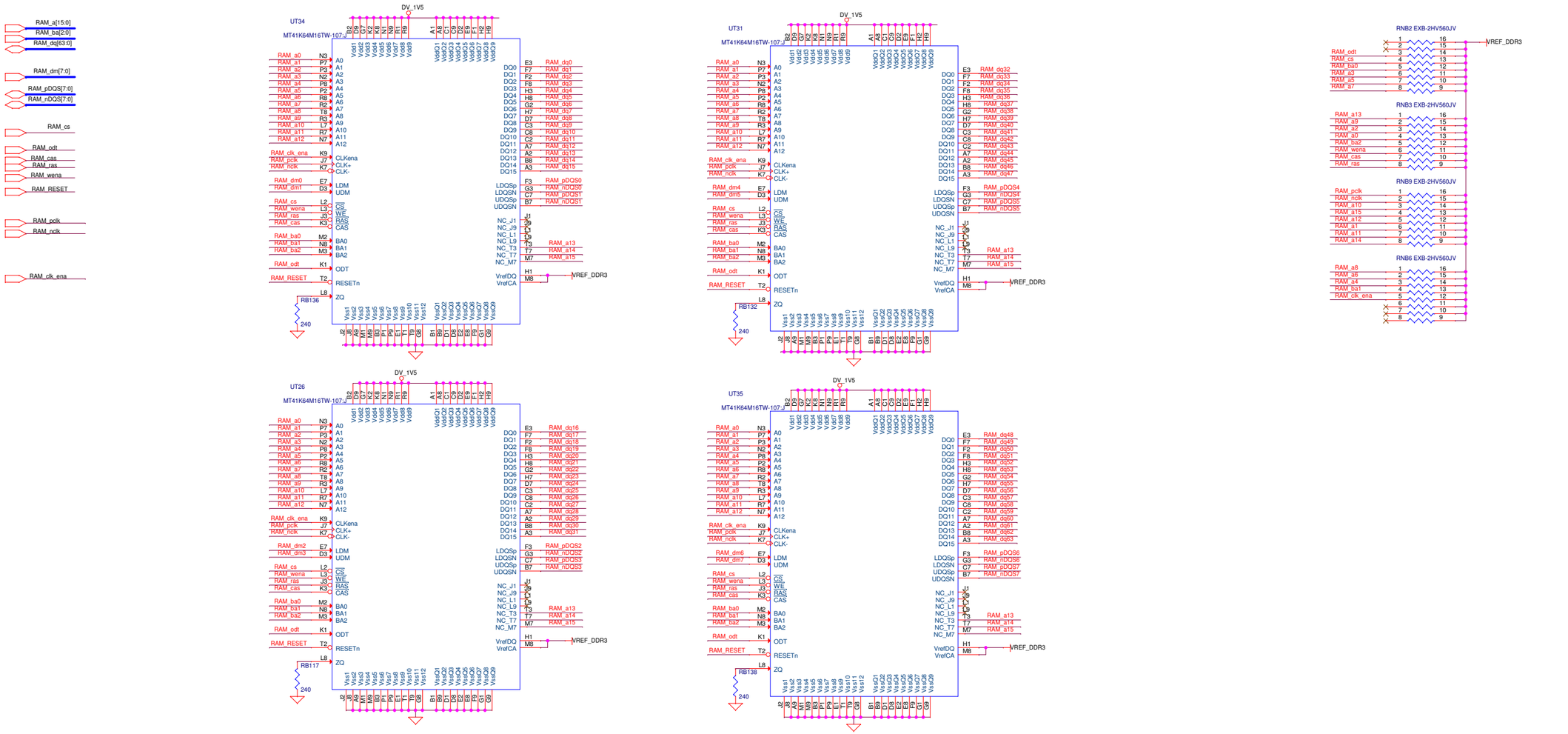


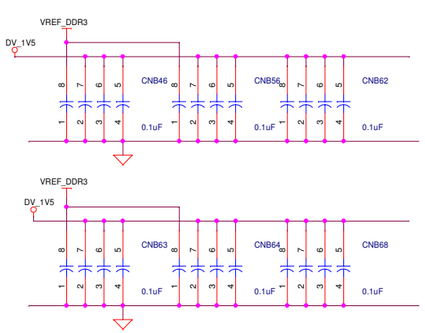


| Item No. | Part No. | Description or Size | Qty. Req. |
|---|---|---|---|
| Parts List | | | |

| Unless Otherwise Specified | | | Originator | A.Semenov | 07.24.2019 |
|---|---|---|---|---|---|
| Fractions | Decimals | Angles | Drawn | A.Semenov | 07.25.2019 |
| ± | ± | ± | Checked | N.Eddy | 07.25.2019 |
| 1. Break all sharp edges 1/64" maximum.<br>2. Do not scale drawing.<br>3. Dimensioning in accord with ANSI Y14.5 standards. | | | Approved | N.Eddy | 07.25.2019 |
| | | | Used On | | |
| Max. all machined surfaces | | | Material | | |

FERMI NATIONAL ACCELERATOR LABORATORY
UNITED STATES DEPARTMENT OF ENERGY

VME_VXS_DDamper_1GHz
ADC's Module. DDR3 RAM 2x32Mx16bit

Schematic

| Scale | Software | Drawing Number | Rev |
|---|---|---|---|
| | OrCAD Capture Version 17.2 | 0880-ED-417250 | 0 |

Date: Monday, July 29, 2019 | Sheet 42 of 46

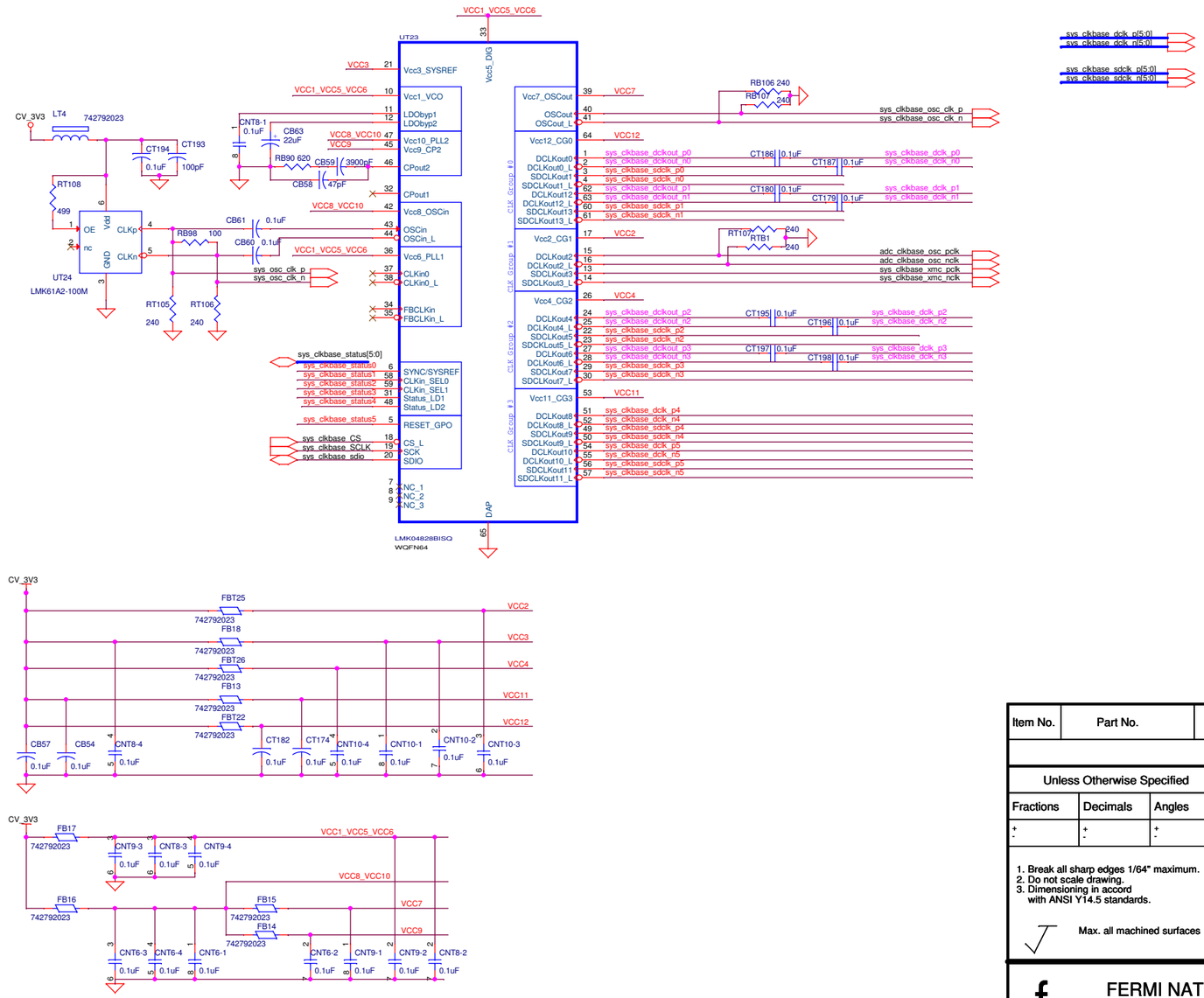


| Item No. | Part No. | Description or Size | Qty. Req. |
|---|---|---|---|
| Parts List | | | |

| Unless Otherwise Specified | | | Originator | A.Semenov | 07.24.2019 |
|---|---|---|---|---|---|
| Fractions | Decimals | Angles | Drawn | A.Semenov | 07.25.2019 |
| + - | + - | + - | Checked | N.Eddy | 07.25.2019 |
| 1. Break all sharp edges 1/64" maximum.<br>2. Do not scale drawing.<br>3. Dimensioning in accord with ANSI Y14.5 standards. | | | Approved | N.Eddy | 07.25.2019 |
| | | | Used On | | |
| Max. all machined surfaces | | | Material | | |

FERMI NATIONAL ACCELERATOR LABORATORY
UNITED STATES DEPARTMENT OF ENERGY

VME_VXS_DDamper_1GHz
System Clock Distribution Station
Schematic

| Scale | Software | Drawing Number | Rev |
|---|---|---|---|
| | OrCAD Capture Version 17.2 | 0880-ED-417250 | 0 |

Date: Monday, July 29, 2019 | Sheet 43 of 46

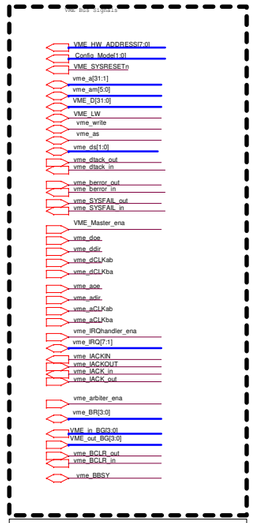


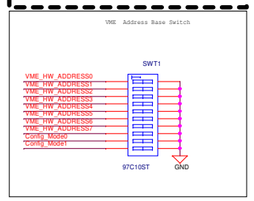


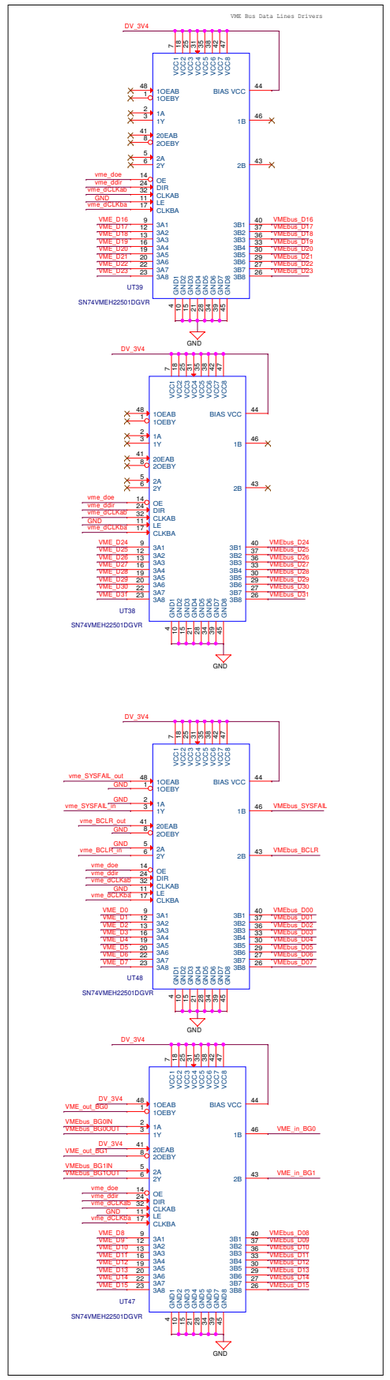


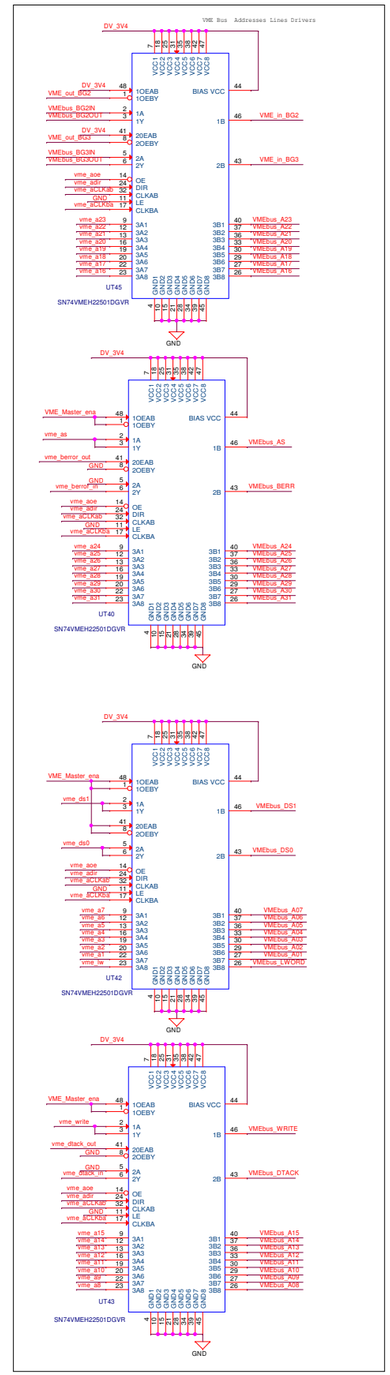


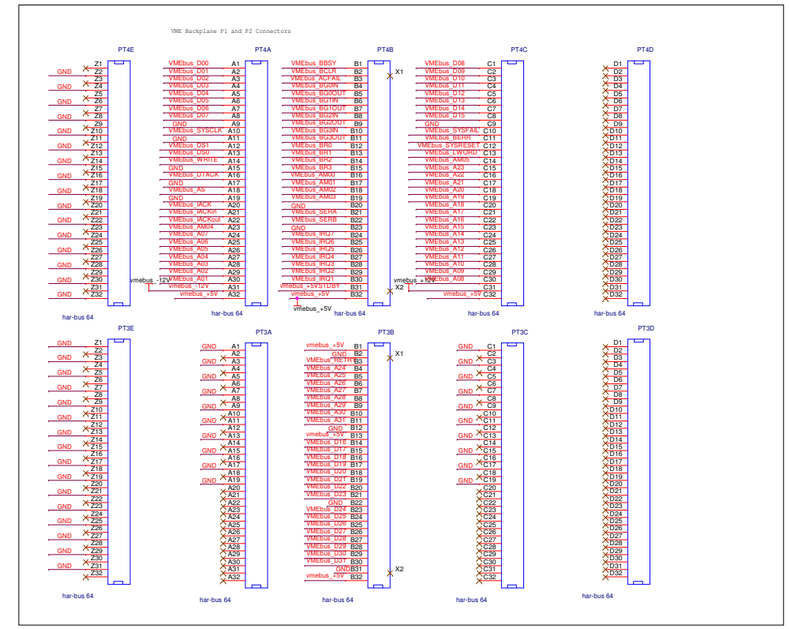


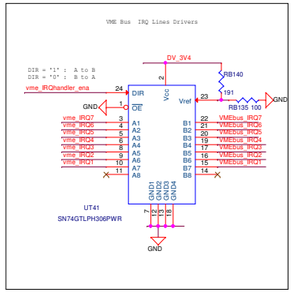


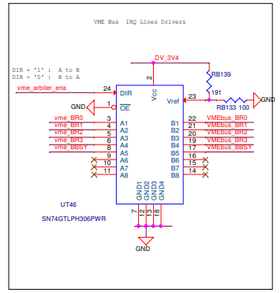


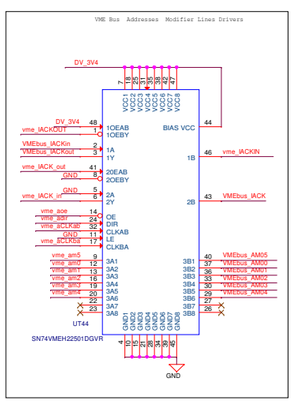


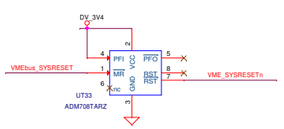

| Item No. | Part No. | Description or Size | Qty. Req. |
|---|---|---|---|
| Parts List | | | |

| Unless Otherwise Specified | | | Originator | A.Semenov | 07.24.2019 |
|---|---|---|---|---|---|
| Fractions | Decimals | Angles | Drawn | A.Semenov | 07.25.2019 |
| * | * | * | Checked | N.Eddy | 07.25.2019 |
| | | | Approved | N.Eddy | 07.25.2019 |

1. Break all sharp edges 1/64" maximum.
2. Do not scale drawing.
3. Dimensioning in accord with ANSI Y14.5 standards.

Max. all machined surfaces

Used On

Material

FERMI NATIONAL ACCELERATOR LABORATORY
UNITED STATES DEPARTMENT OF ENERGY

VME_VXS_DDamper_1GHz
VME BUS Buffers

Schematic

| Scale | Software | Drawing Number | Rev |
|---|---|---|---|
| | OrCAD Capture Version 17.2 | 0880-ED-417250 | 0 |

Date: Monday, July 29, 2019 Sheet 44 of 46

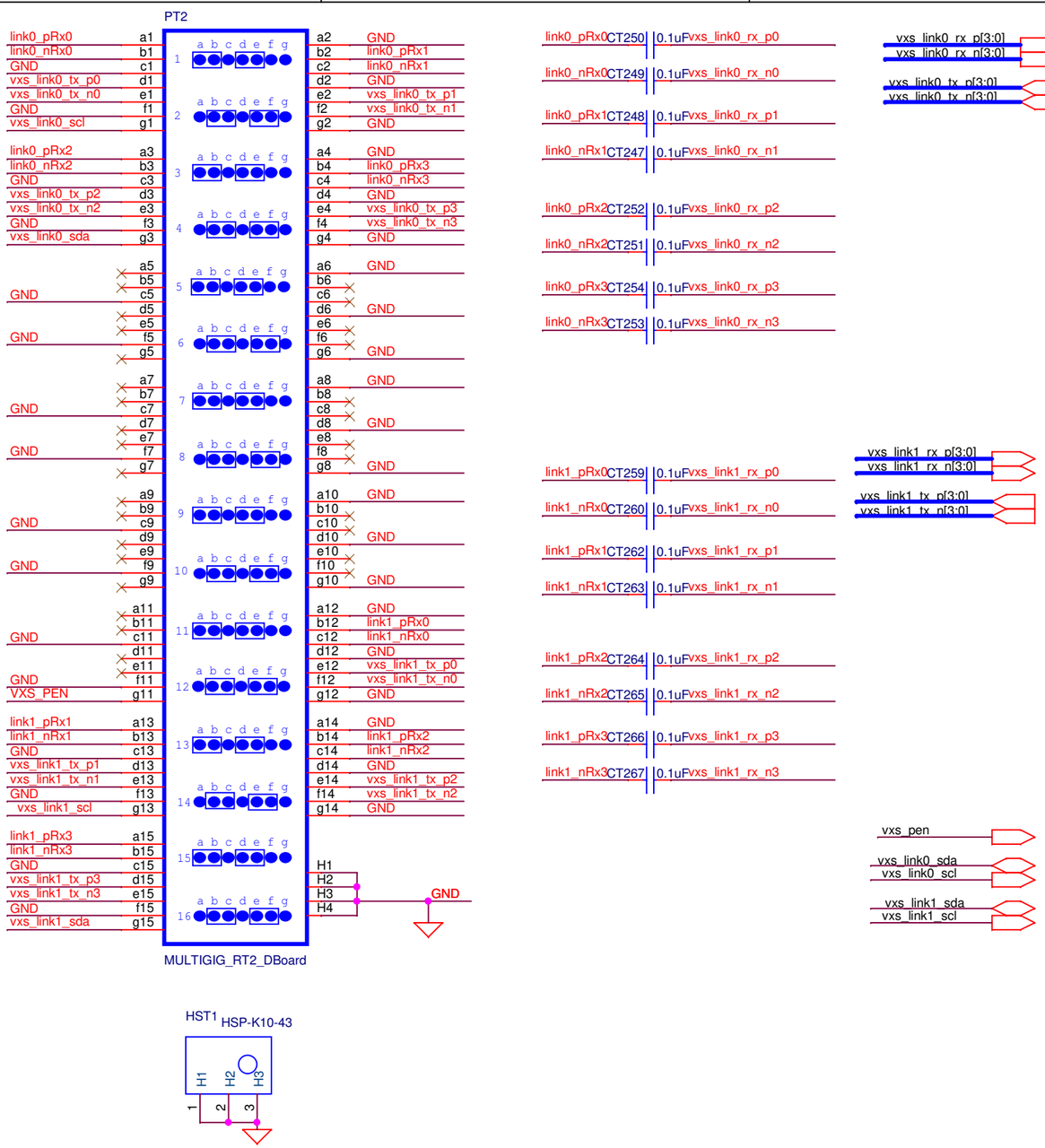


| Item No. | Part No. | Description or Size | Qty. Req. |
|---|---|---|---|

Parts List

| Unless Otherwise Specified | | | Originator | A.Semenov | 07.24.2019 |
|---|---|---|---|---|---|
| Fractions | Decimals | Angles | Drawn | A.Semenov | 07.25.2019 |
| + - | + - | + - | Checked | N.Eddy | 07.25.2019 |
| 1. Break all sharp edges 1/64" maximum.<br>2. Do not scale drawing.<br>3. Dimensioning in accord with ANSI Y14.5 standards. | | | Approved | N.Eddy | 07.25.2019 |
| | | | Used On | | |
| Max. all machined surfaces | | | Material | | |

FERMI NATIONAL ACCELERATOR LABORATORY
UNITED STATES DEPARTMENT OF ENERGY

VME_VXS_DDamper_1GHz
VXS Interface

Schematic

| Scale | Software | Drawing Number | Rev |
|---|---|---|---|
| | OrCAD Capture Version 17.2 | 0880-ED-417250 | 0 |

Date: Monday, July 29, 2019 | Sheet 45 of 46

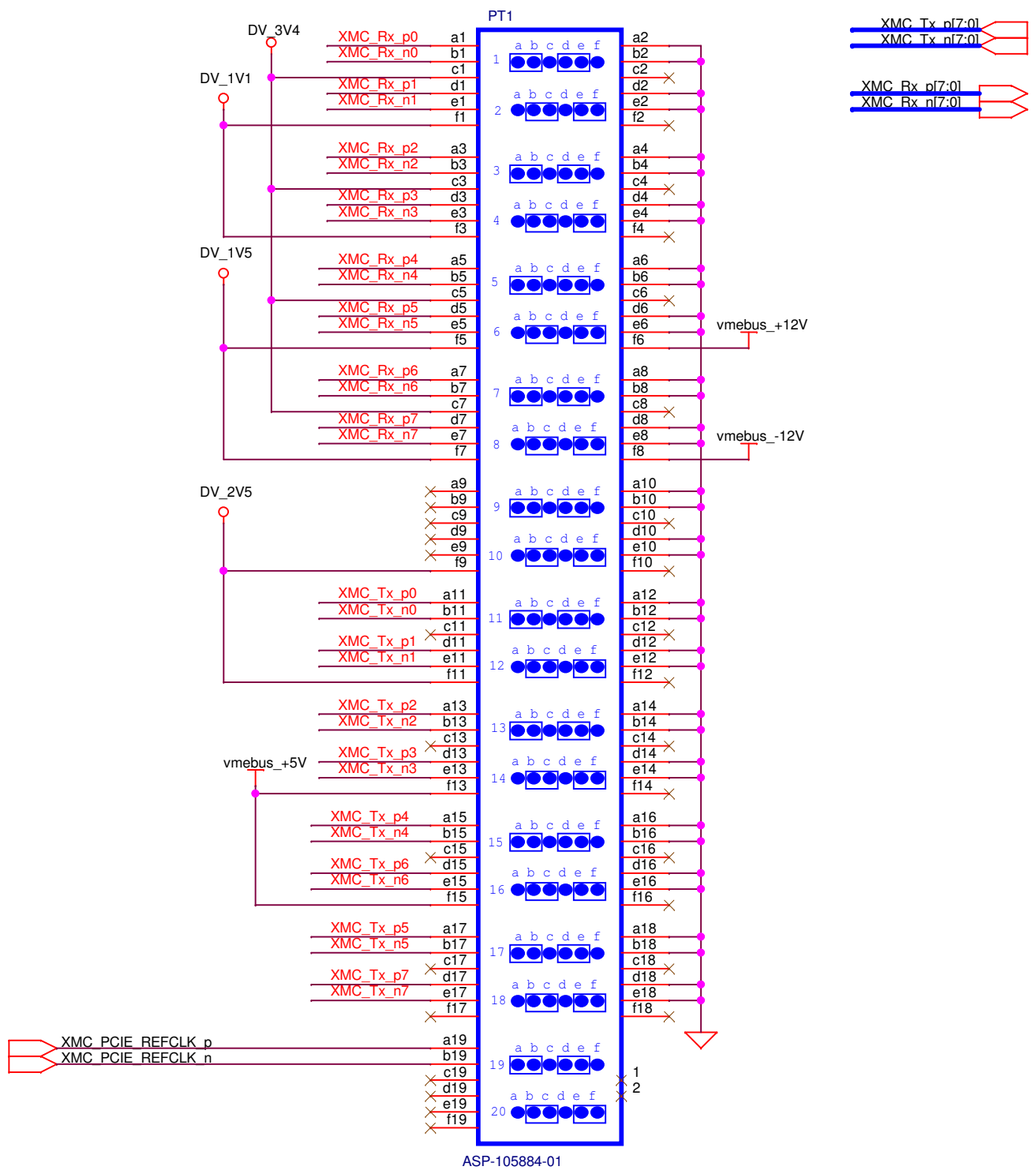


| Item No. | Part No. | Description or Size | Qty. Req. |
|---|---|---|---|

Parts List

| Unless Otherwise Specified | | | Originator | A.Semenov | 07.24.2019 |
|---|---|---|---|---|---|
| Fractions | Decimals | Angles | Drawn | A.Semenov | 07.25.2019 |
| + - | + - | + - | Checked | N.Eddy | 07.25.2019 |
| 1. Break all sharp edges 1/64" maximum.<br>2. Do not scale drawing.<br>3. Dimensioning in accord with ANSI Y14.5 standards.<br>Max. all machined surfaces | | | Approved | N.Eddy | 07.25.2019 |
| | | | Used On | | |
| | | | Material | | |

FERMI NATIONAL ACCELERATOR LABORATORY
UNITED STATES DEPARTMENT OF ENERGY

VME_VXS_DDamper_1GHz
XMC Card Interface

Schematic

| Scale | Software | Drawing Number | Rev |
|---|---|---|---|
| | OrCAD Capture Version 17.2 | 0880-ED-417250 | 0 |

Date: Monday, July 29, 2019 | Sheet 46 of 46