γ_t Reduction in MI

- One RCS scenario called for RCS extraction & MI injection at 16-22 GeV (kinetic).
- 16 GeV KE → γ = 18.0. MI natural γt = 21.6 (19.3 GeV) must be reduced to enjoy benefits injecting below transition.

- Transition gamma is : $\gamma_t = \sqrt{1/\alpha}$ with $\alpha = \langle \eta/\rho \rangle$
  Decreasing γ_t requires average dispersion be increased.

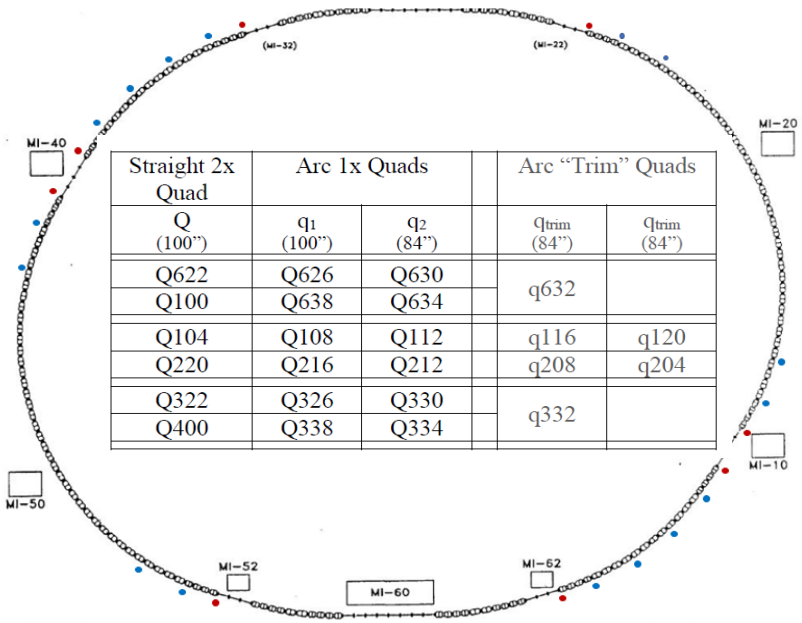

Straight 2x Quad	Arc 1x Quads		Arc "Trim" Quads	
Q (100")	q_1 (100")	q_2 (84")	q_{trim} (84")	q_{trim} (84")
Q622	Q626	Q630	q632	
Q100	Q638	Q634		
Q104	Q108	Q112	q116	q120
Q220	Q216	Q212	q208	q204
Q322	Q326	Q330	q332	
Q400	Q338	Q334		

Quadrupoles constituting the 8 γ_t reduction circuits

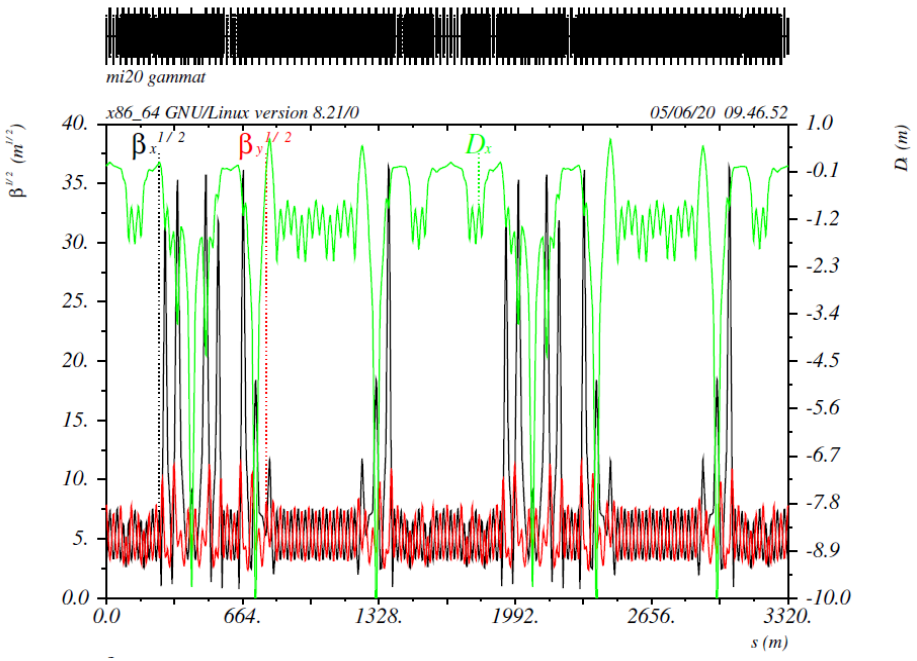

Lattice functions with γ_t reduced to γ_t = 17.76 (15.6 GeV kinetic).

- 8 sets of quad triplets reduce γt
  - 2 quads in arcs create η bump
  - 1 quad 2x strength at end of straight cancels β-wave
- Straight section optics unaffected.

- Conservative beam parameter assumptions reduce γt to 17.6 (15.6 GeV kinetic) before aperture limited.

Resonant Extraction from DR at Low Energy (0.8→2 GeV)
[CCI student Axel Moreen's summer project]

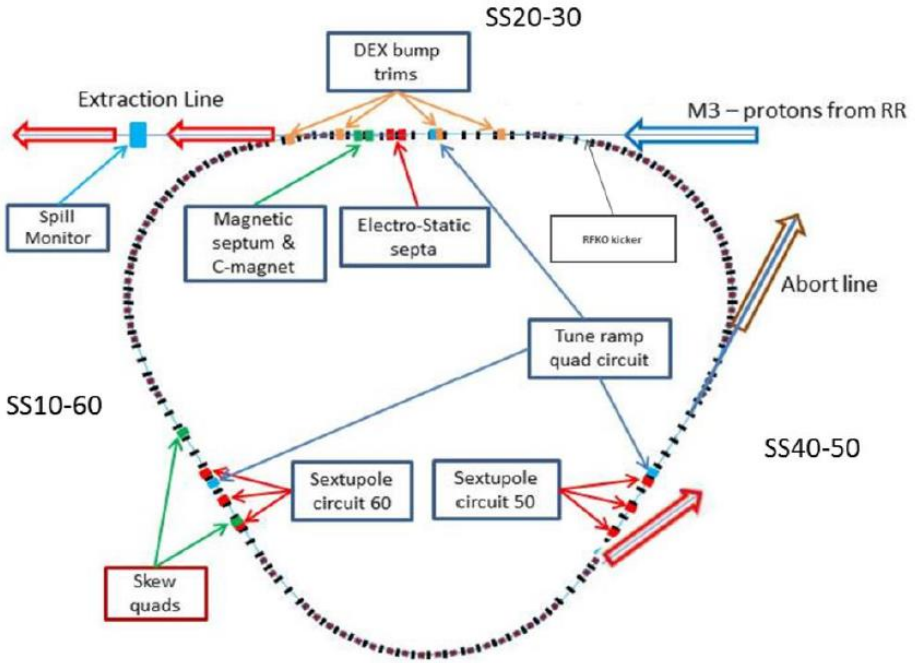

ORTHOGONAL HARMONIC SEXTUPOLE CIRCUITS FOR 1/3 -INTEGER EXTRACTION

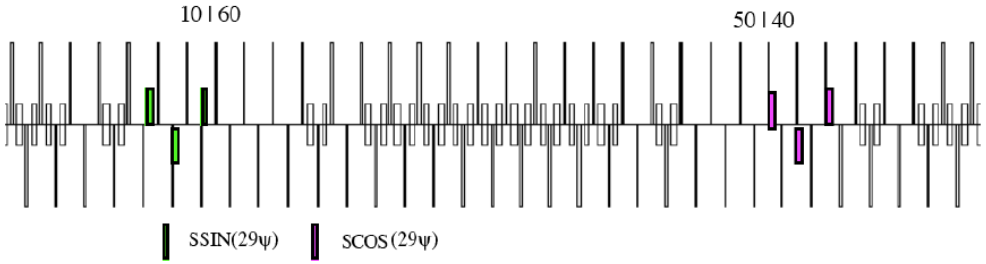

- 800 MeV resonant extraction in support of Mu2e-II plans
- Enhance FNAL capabilities to support low energy experiments.

- 1/3-integer extraction at μx=29/3

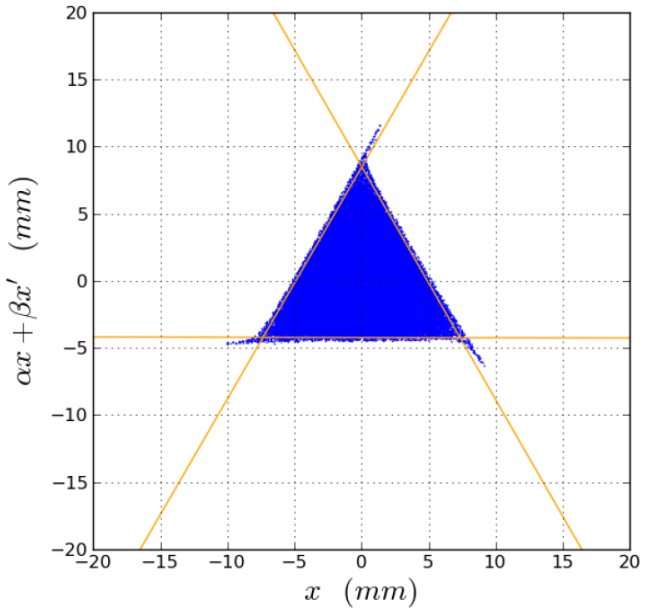

Generalized Local β-Bumps -- ***abandoned***