Ion Source R&D at the SNS

Robert F. Welton

Accelerator Physics and Technology Seminar
Fermilab January 19, 2006

Outline

I. The SNS Facility and Ion Source Requirements

II. The Berkeley H^- Ion Source

III. Performance of the Berkeley Source at Low and High Duty Factor

IV. The Development of the SNS External Antenna Source

V. Other R&D Directions – New Cs Collars, etc.

The Spallation Neutron Source

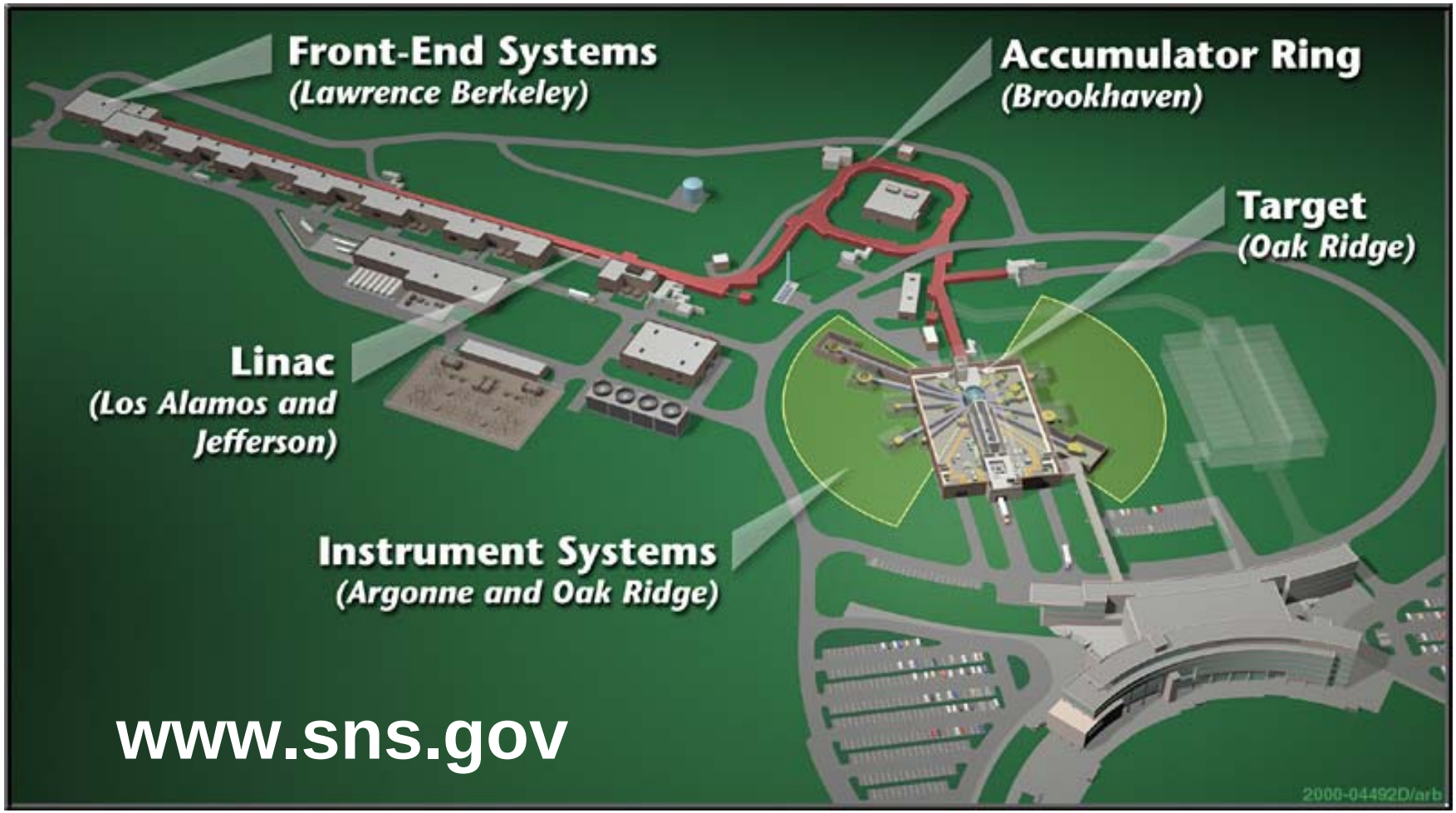

SNS Ion Source Requirements

	Year Needed	Beam Current (LEBT)	Duty Factor (Pulse Length, Rep. Rate)	Emittance RMS-Normalized	Run Period
SNS Baseline Operation (1.4 MW)	2008	~40 mA	7% (1.2 ms, 60 Hz)	< 0.2 π mm mrad	21 days
SNS Power Upgrade (3+ MW)	2009-2011	75-100 mA	7% (1.2 ms, 60 Hz)	0.25-0.35 π mm mrad	

2002 Survey of H^- Ion Sources

In routine use at major facilities or extensively commissioned

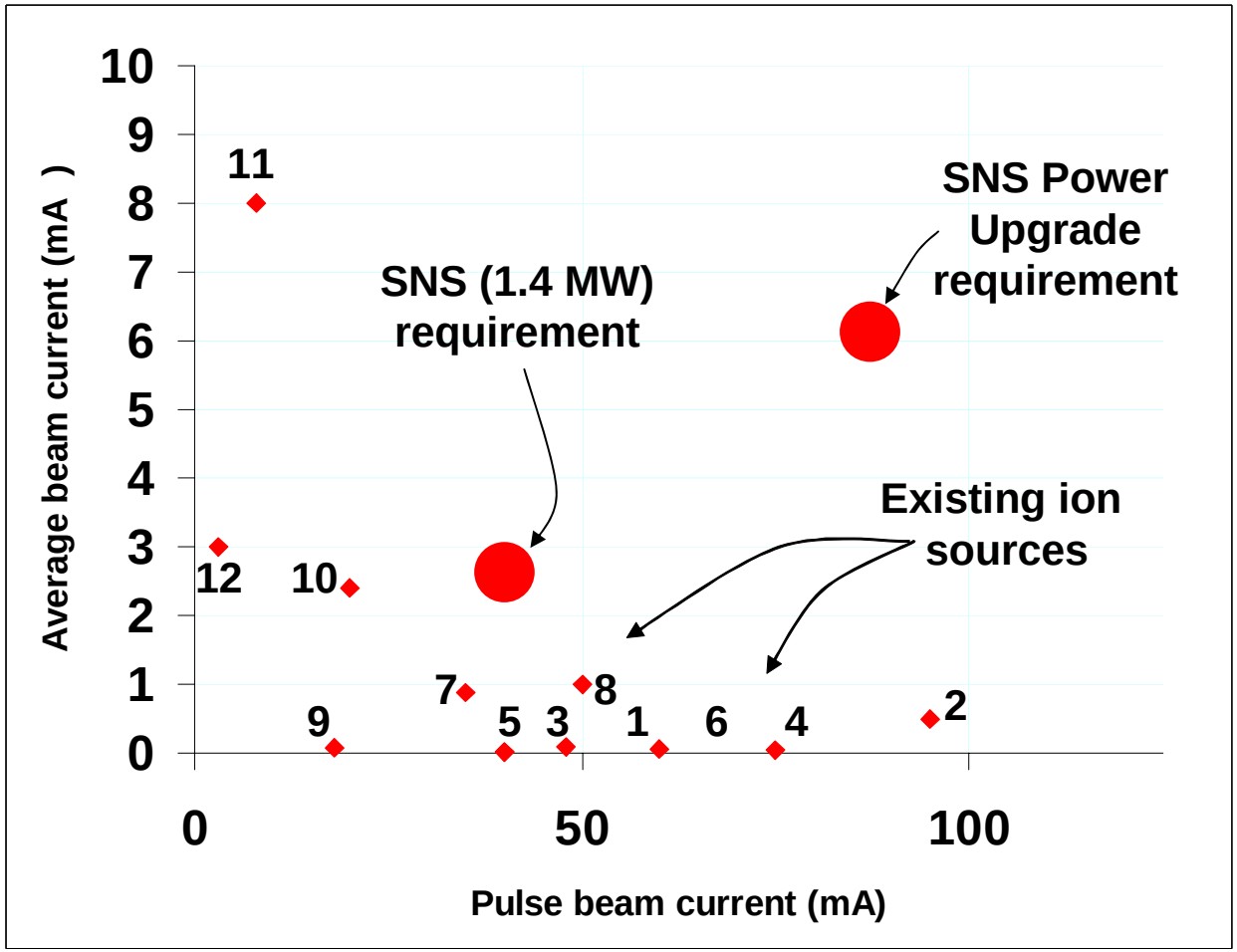

DESY-HERA BNL-AGS ANL-IPNS FNAL	1 2 3 4	Magnetron
DESY-HERA SSC	5 6	Multicusp RF
RAL-ISIS INR-MMF	7 8	Penning
KEK-KENS LANL-LANSCE	9 10	Multicusp surface converter
TRIUMF Jyvaskyla-LIISA	11 12	Multicusp filament

- R.F. Welton, "Overview of High-brightness H^- Ion Sources", LINAC02, Gyeongju, Korea

The LBNL-SNS Ion Source

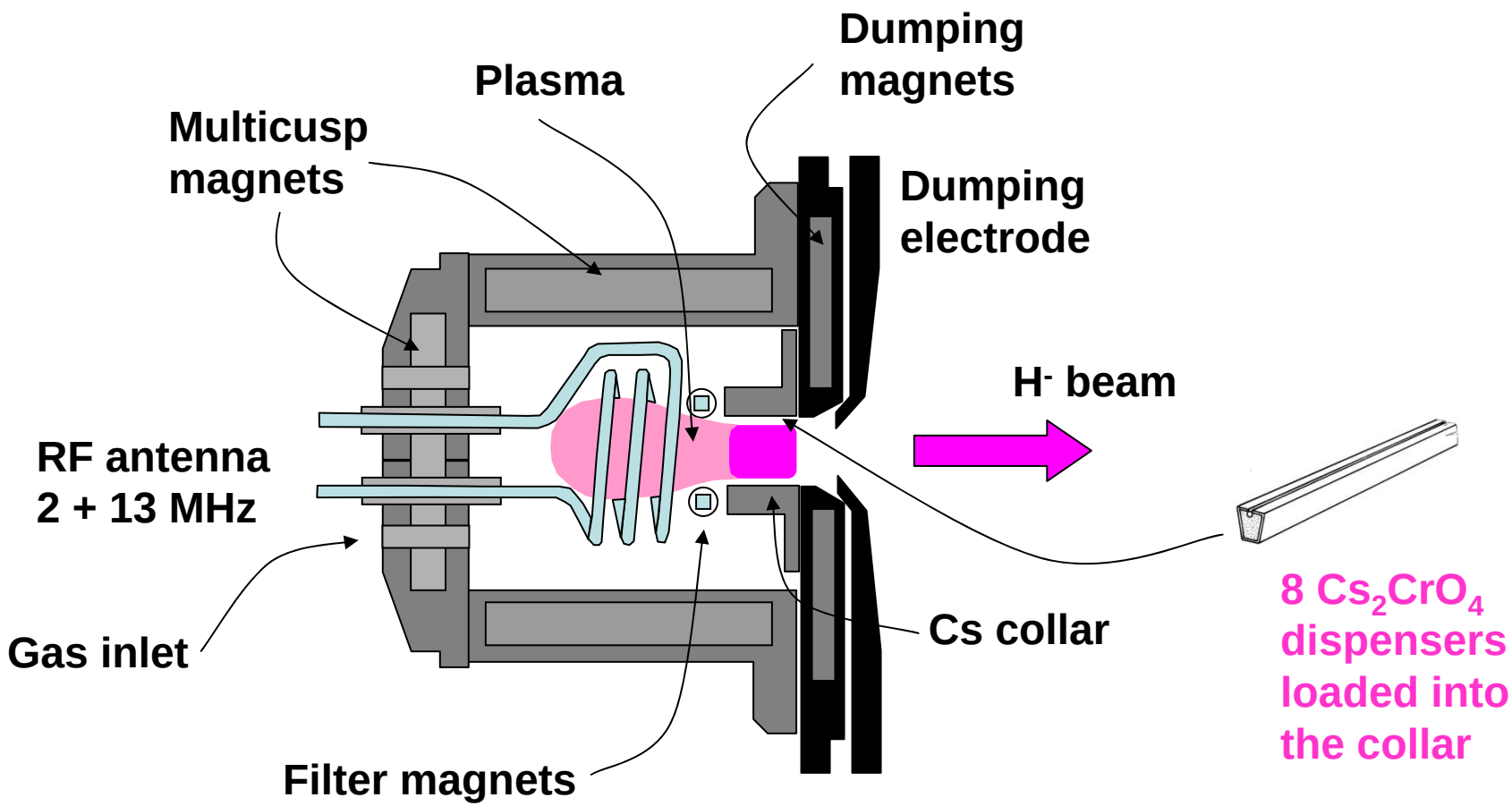

Source Performance at Low-Duty Factor: Accelerator Commissioning

	Delivered Beam Currents	Typical Beam Duty-Factors	Length of Comm. Period	Ion Source Availability	Source related issues
Front End Re-Commissioning	10-50 mA	~0.1%	~40 days	86%	•LEBT insulators •RF Amplifier
DTL 1-3 Commissioning	10-45 mA	~0.1%	~90 days	95%	•Coated water lines •RF amplifier
DTL 4-6 & CCL 1-3 Commissioning	10-50 mA	~0.1%	~50 days	99.6%	•LEBT water leak •RF feed cable
SCL Commissioning	10-40 mA	~0.02%	~90 days	99.8%	•LEBT chopper short

Performance at High Duty-Factor: Endurance Runs on the Ion Source Test Stand

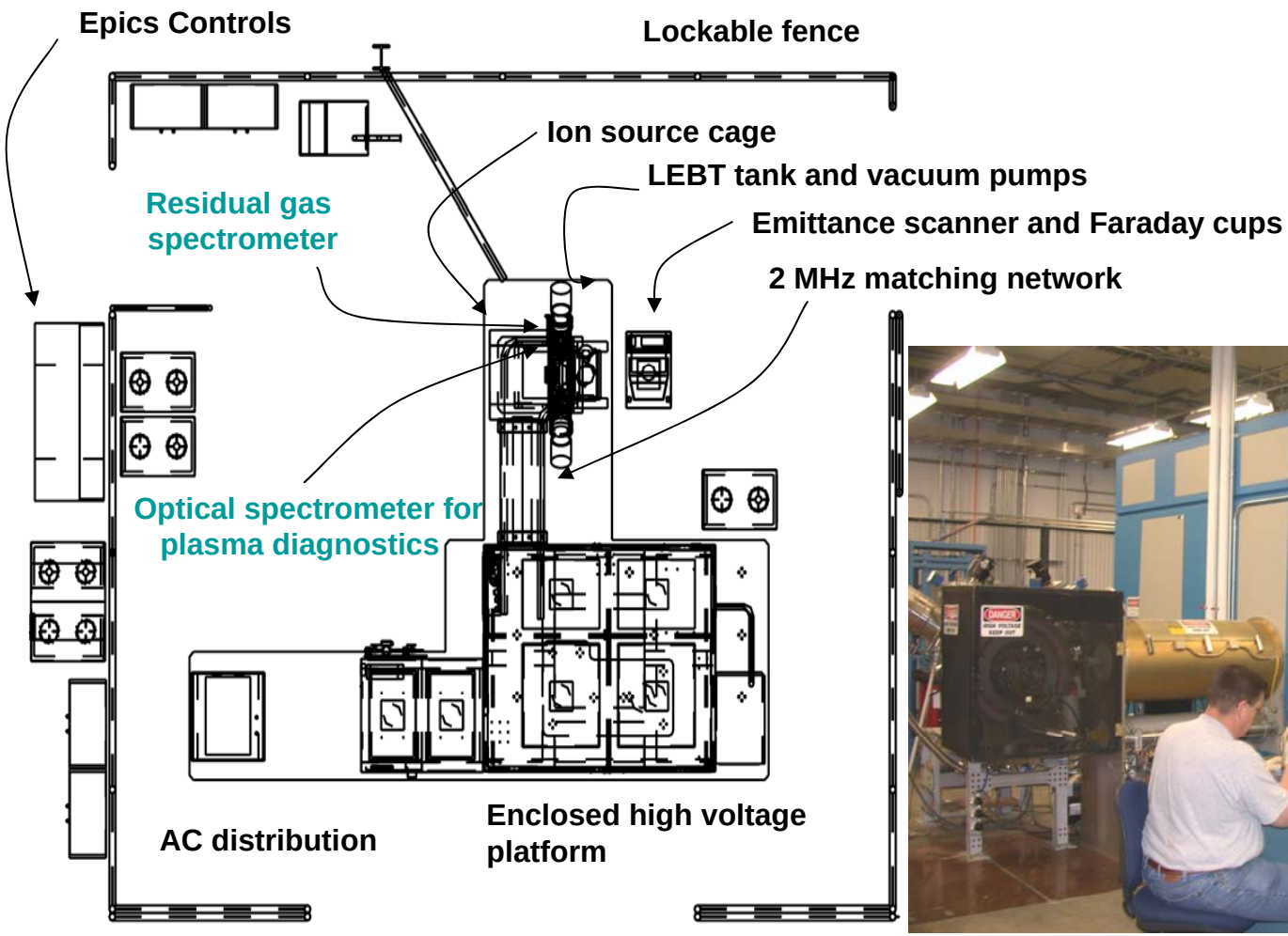

Welton et al, RSI 75 (2004) 1793

Early High-Duty Factor Test Runs

Experimental runs at full duty factor and maximum beam current

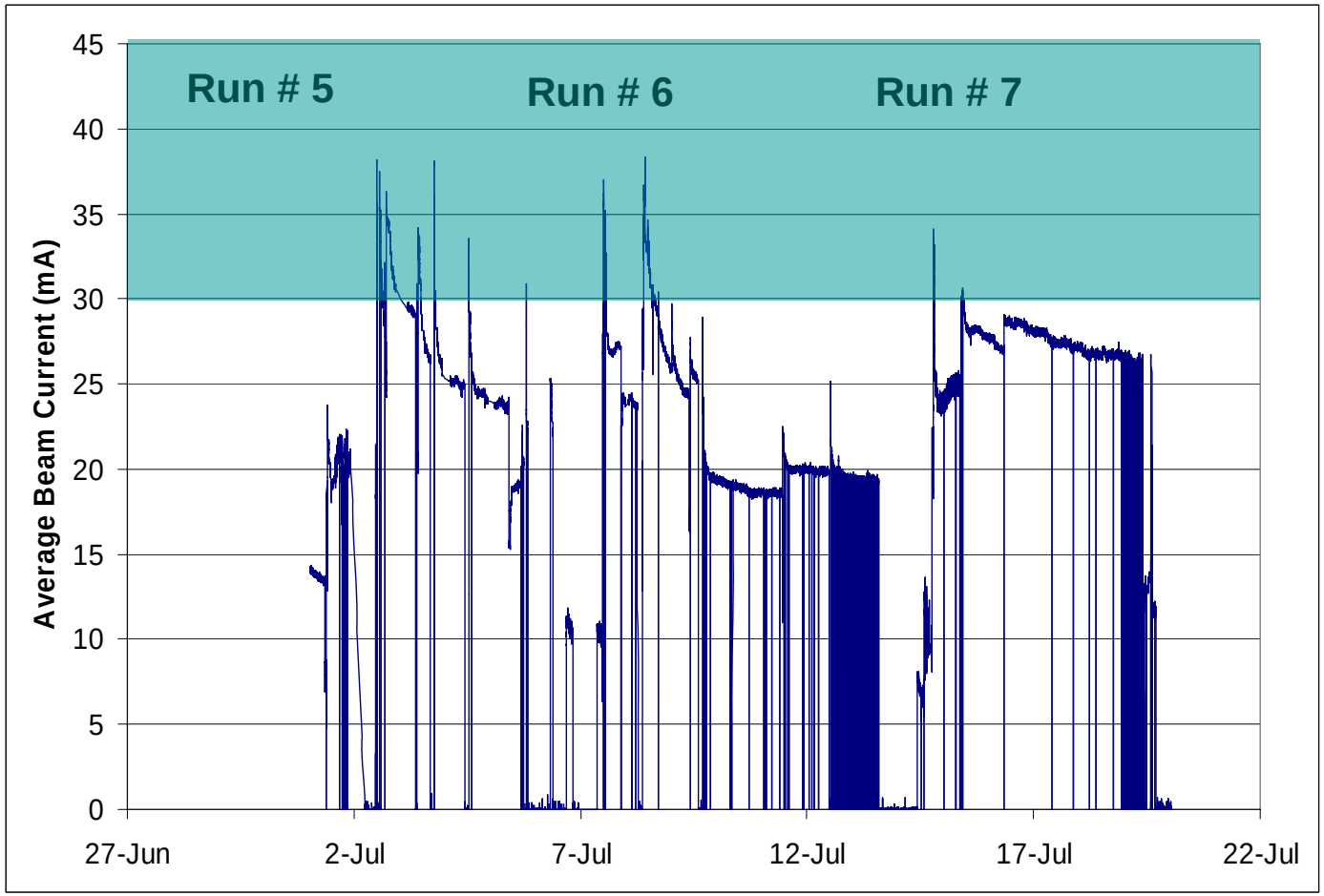

Each run only lasted a few days due to an average beam decay rate of ~5 mA/day

The 3 best runs of the 7 are shown

Data Analysis

- Some background…How is H^- produced in the source?

Volume Production
(accounts for ~10mA in SNS source)

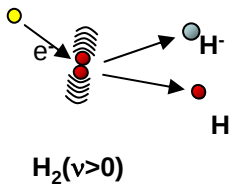

Surface Production
(Requires Cs accounts for 30-40 mA)

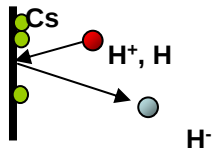

- During each run an optical spectrometer monitored plasma density which was found to be constant. This suggests a problem with surface production → Cs distribution.

- Each Cs dispenser contains a compressed powder mixture of Cs_2CrO_4, Al and Zr (St101®) which release Cs though these reaction pathways:

$$4\ Cs_2CrO_4 + 5\ Zr \rightarrow 8\ Cs\ (g) + 5\ ZrO_2 + 2\ Cr_2O_3$$

$$6\ Cs_2CrO_4 + 10\ Al \rightarrow 12\ Cs\ (g) + 5\ Al_2O_3 + 3\ Cr_2O_3$$

- Thus if elemental Zr and Al become depleted Cs will not be released!

Data Analysis

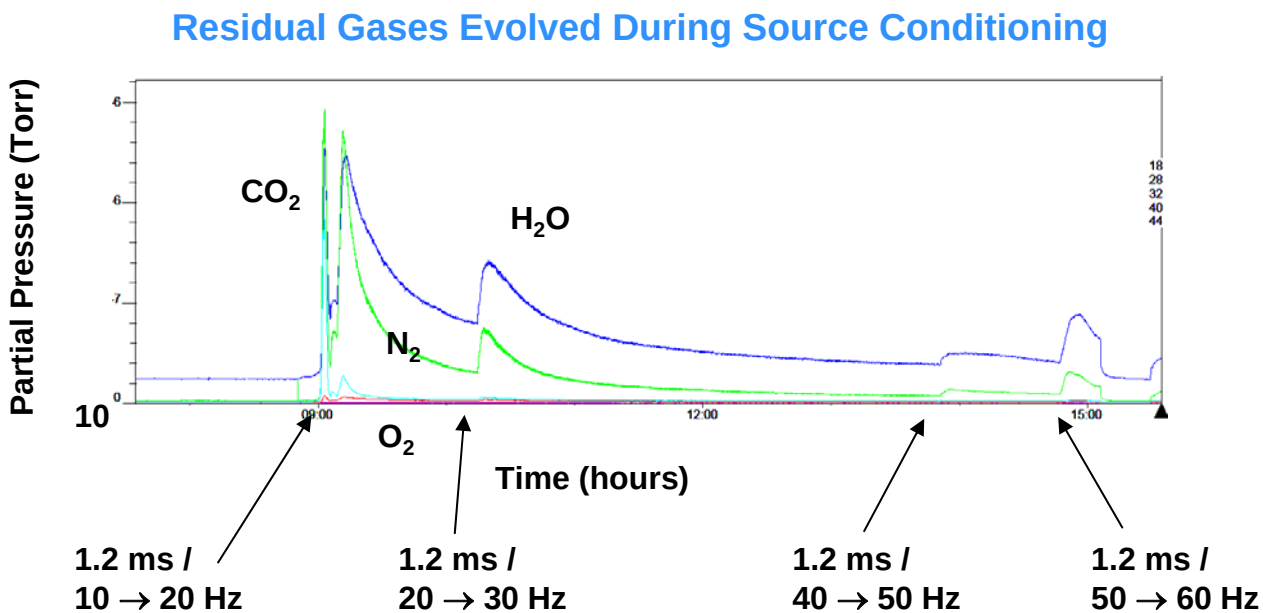

- **Computational thermodynamic analysis (HSC) shows that free Zr and Al will form stable (and useless) compounds with residual gases evolved from the source during source conditioning at temperatures greater than ~250 C.**

- **The new operating procedure is simple: Fully condition the source to full duty factor before raising the Cs collar temperature above 250 C!**

Later High-Duty Factor Test Runs

Each run employed the new source conditioning technique

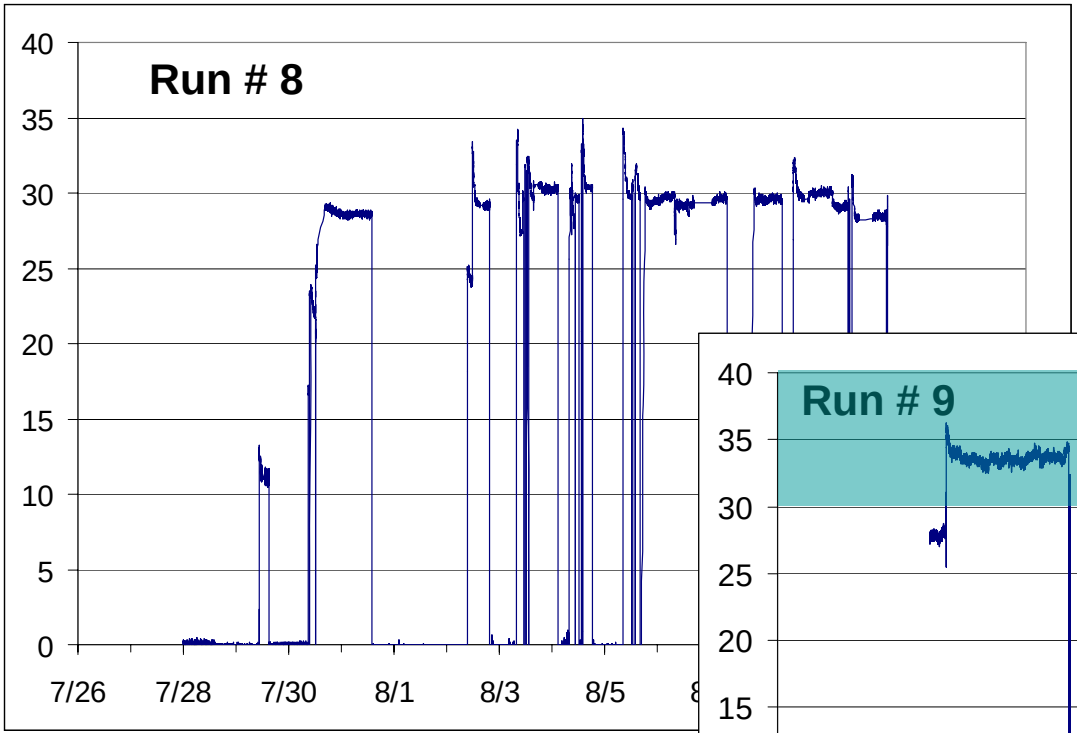

Run #9 ran for 16 days with an average beam current of 33 mA and a 0.5 mA/day beam attenuation rate. 85 million pulses with only 5 trips!

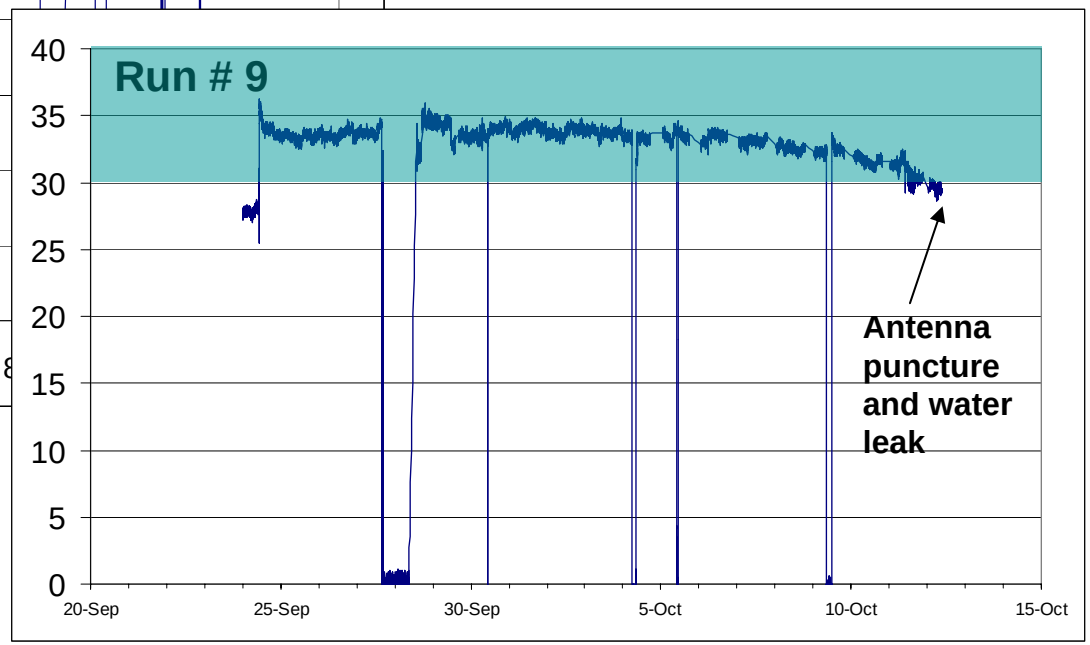

Run #8 ran for 11 days and was terminated to accommodate other experiments. Average beam current was 30mA.

The SNS External Antenna H^- Source

A significant development but does not yet meet the SNS requirements….

- ***DESY has shown a <u>several year</u> source lifetime at ~40 mA but with low duty factor 0.1% (~50W plasma) – no antenna issues!!***
- ***Can an external antenna source like the one employed at DESY be adapted for use in high-power source applications like the SNS (~3500W plasma)?***
- ***To answer this question we designed and tested a simple external antenna module which replaces the internal antenna in the LBNL source ….***

The External Antenna Module

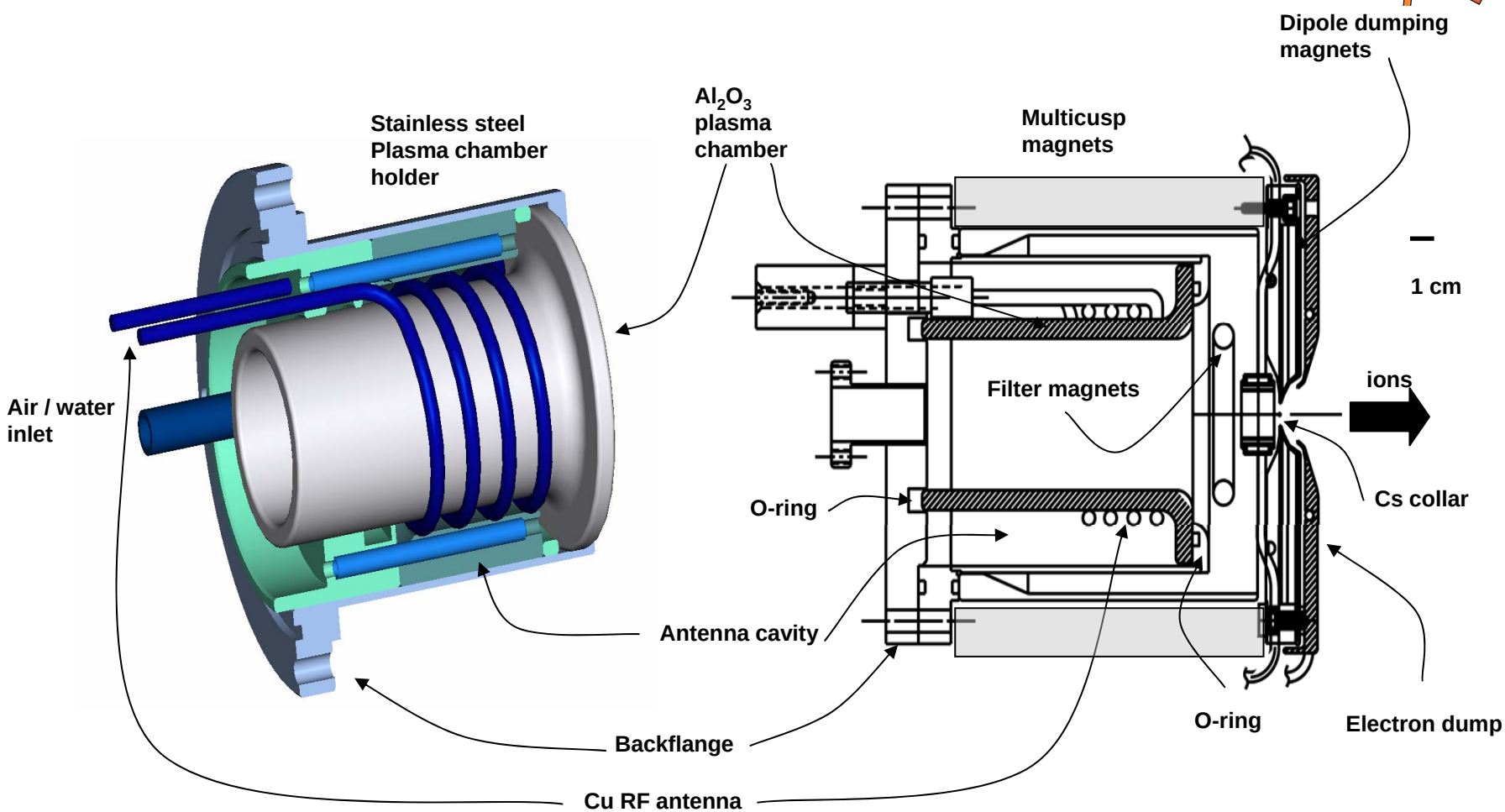

Simple air-cooled chamber with a six-turn high-inductance antenna with no magnetic plasma confinement

Initial Test of the External Antenna

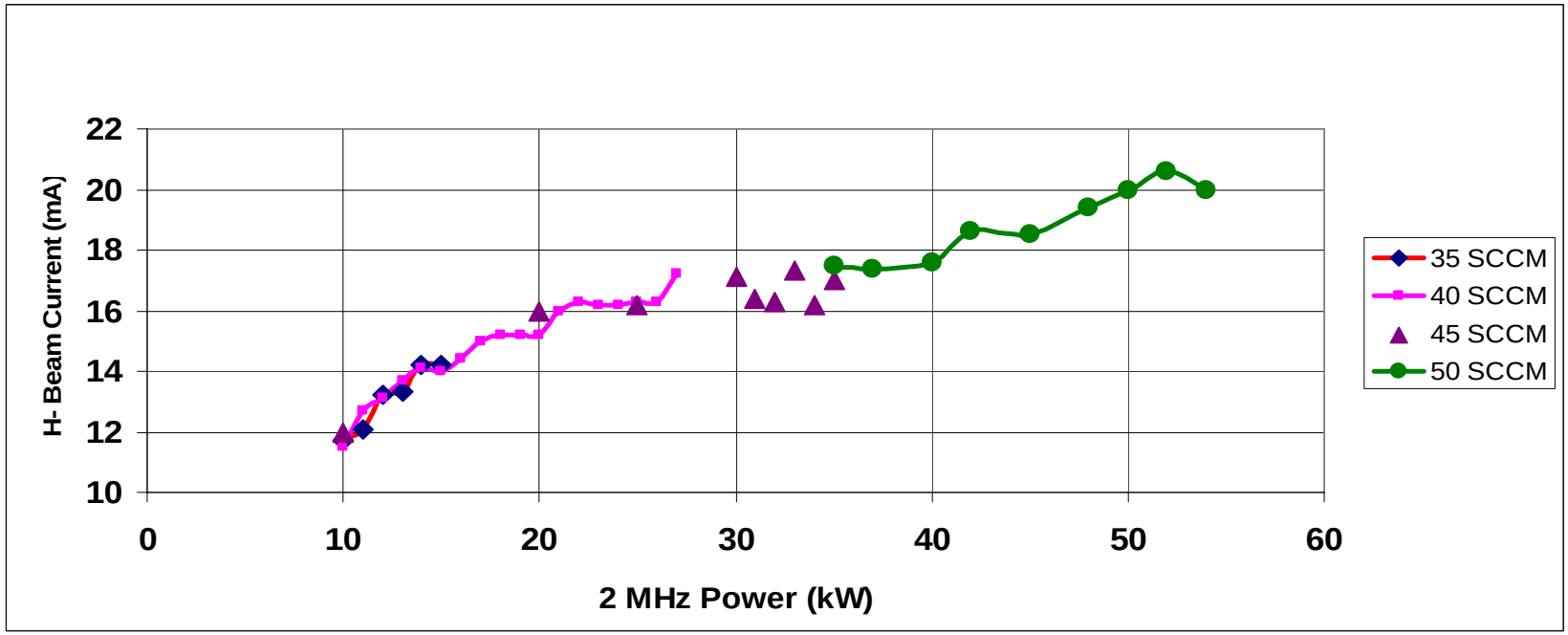

- **Status:**
  - **Highest beam current produced to date by any uncesiated ion source in our lab: 32 mA!**
  - **Unable to sustain H^- pulses longer than ~150 us (the DESY operating point)**

The Hollow Anode Electron Gun

- By injecting electrons directly into the source plasma we hope to stabilize the plasma for longer pulses > 150 us and enhance plasma density

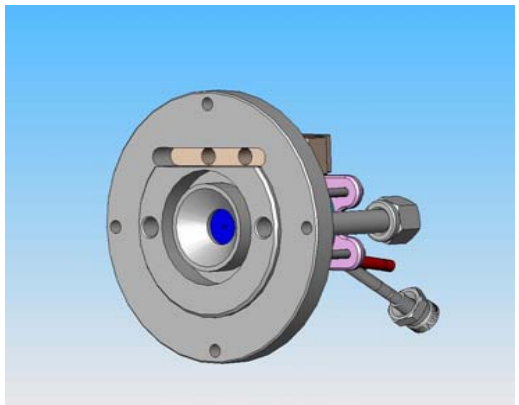

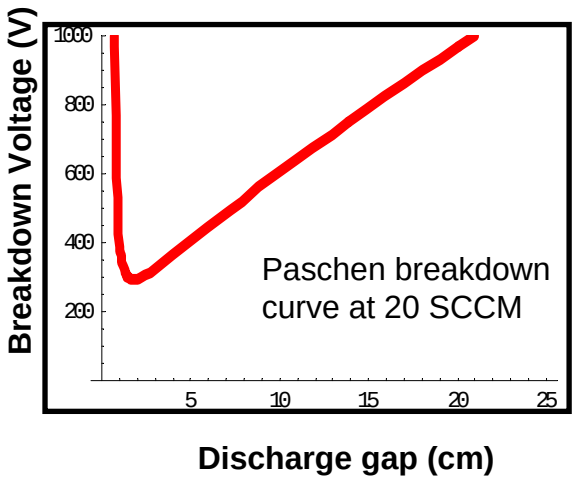

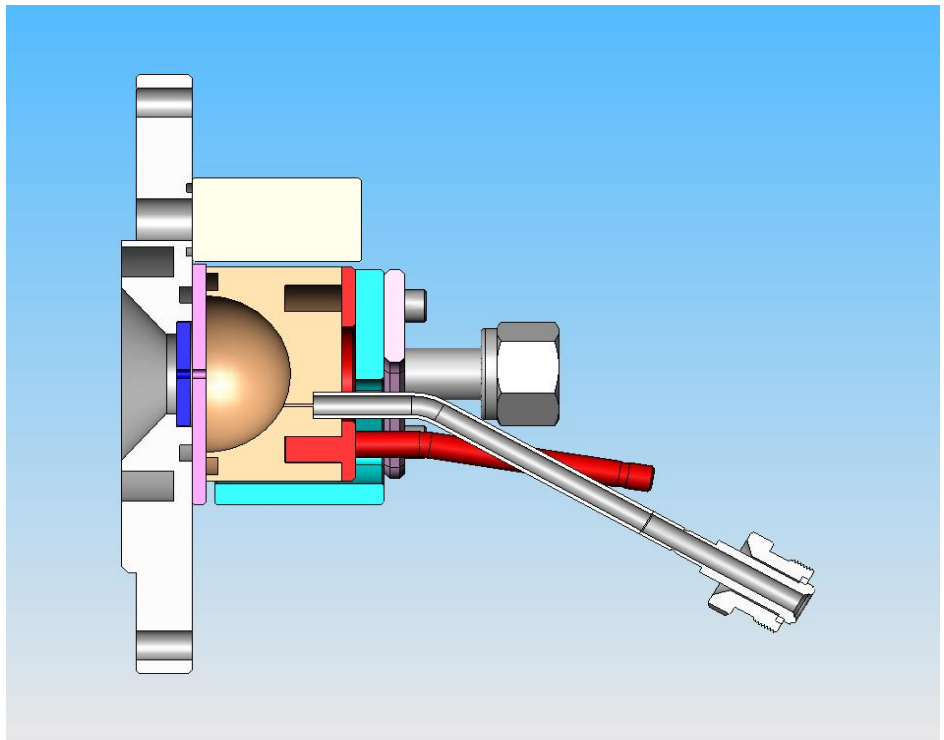

External Antenna with Hollow Anode E-gun…Beam Current?

- H^- pulses of up to **51 mA** have been produced in 200 us pulses! A **50% increase** over the non-injected source – no Cs employed.

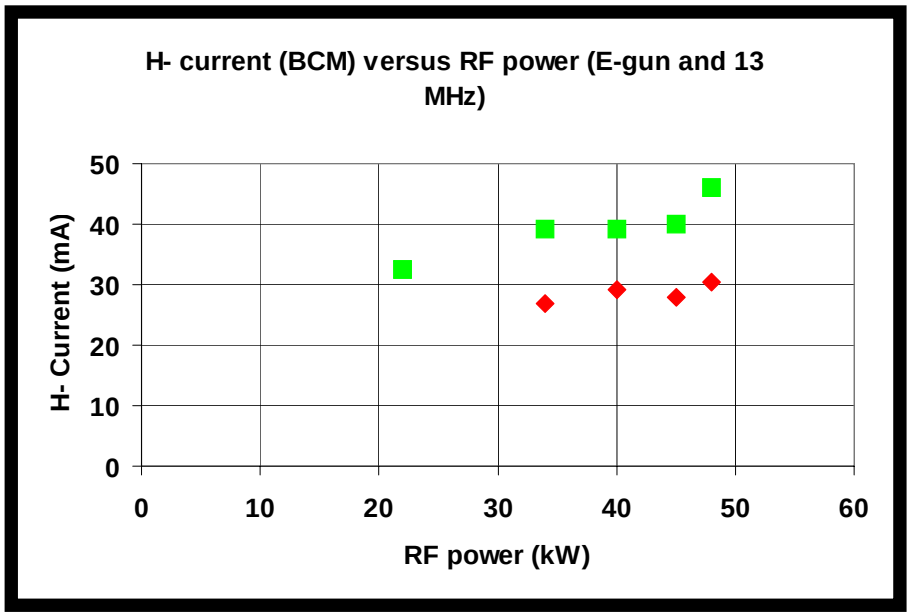

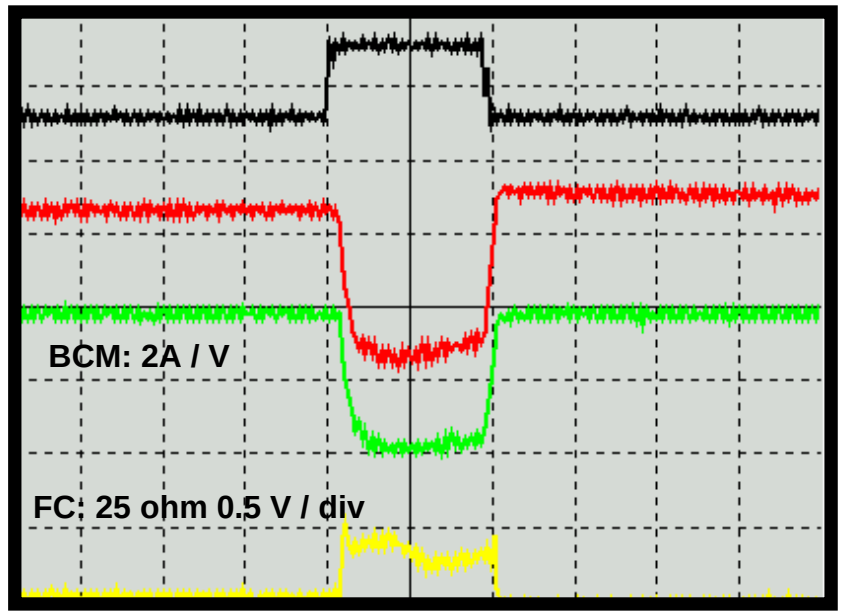

- Result not surprising since supplemental injection of electrons into ECR sources (biased disk, wall coating, electron guns) have greatly improved source performance.
- In the literature, supplemental injection of electrons into H^- RF-driven plasma sources remains largely unexplored.

External Antenna with Hollow Anode E-gun…Long pulses?

2 MHz RF match: 84%

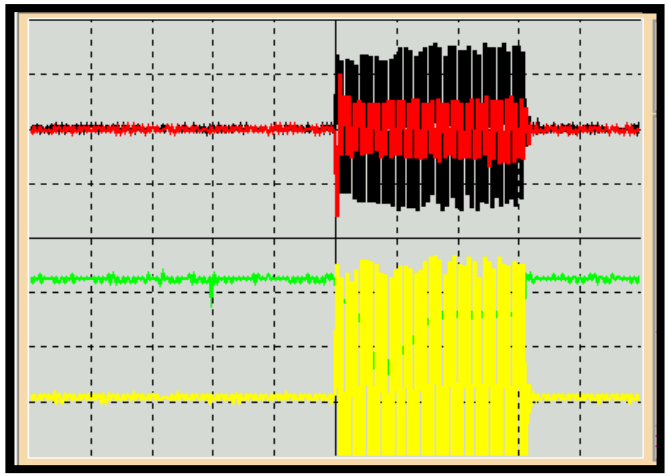

400 μs / div

Beam pulse droop at 50 SCCM H_2 Flow: ~60%

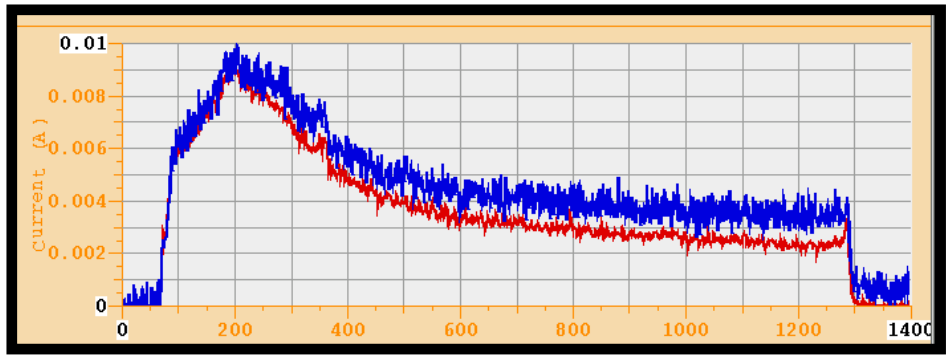

Beam pulse droop at 80 SCCM H_2 Flow: 30%

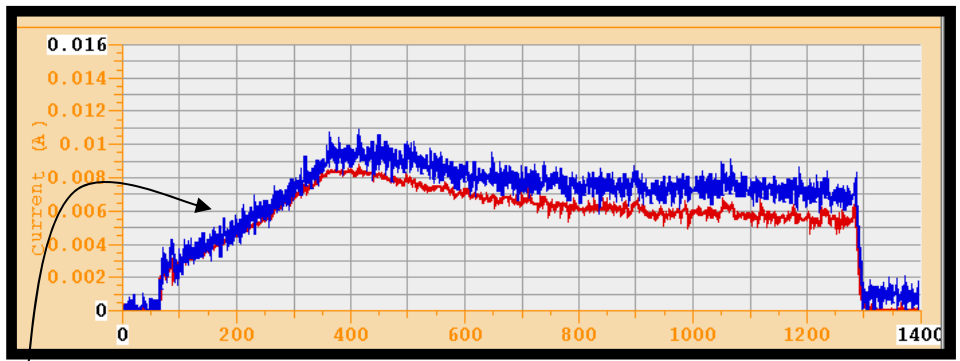

Matching network: not tuned

- **Full 1.2 ms pulses achieved!**
- **Excessive droop observed**

What is the Lifetime of the Hollow Anode E-gun?

- Given the success of the E-gun we asked our student, Jerry Carr, to design and fabricate a test stand capable of monitoring the extracted electron flux
- Current run: 18 days – no current degradation ~72 mA!

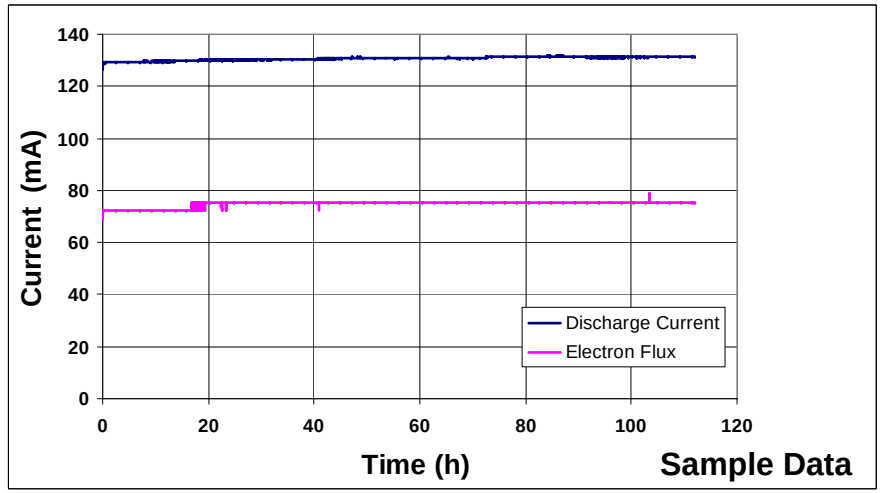

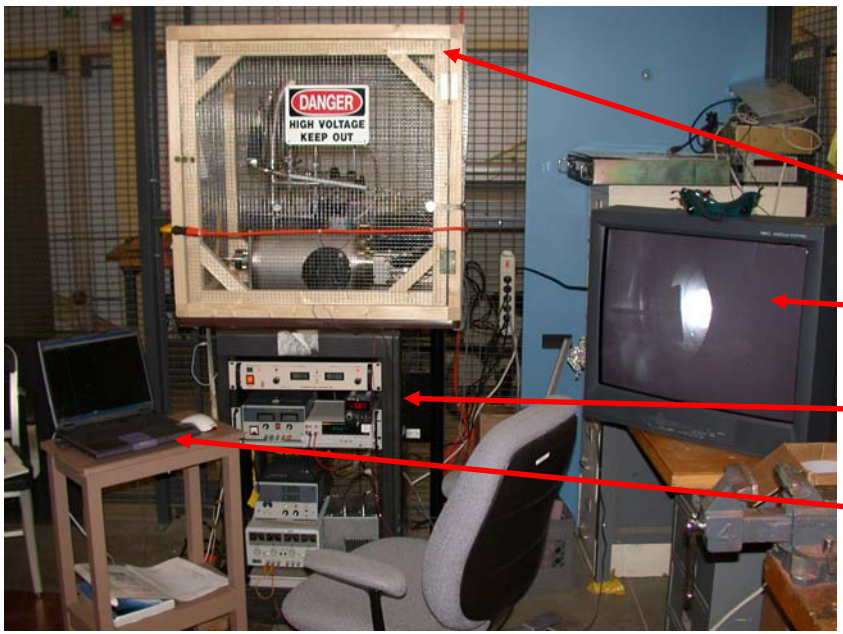

High voltage enclosure

Video display of the electron stream

Power supplies

All parameters logged to Laptop

What about High Duty-Factor Operation….

- Operation at full duty-factor imposes a 3.6 kW heat load on chamber which cannot be cooled by air alone.
- Chamber failed twice with air cooling at 1.2 ms / 40 Hz / 30 kW or a heat load of 1.4 kW as predicted by modeling.
- Submerging antenna in de-ionized water resulted in a ~50% decrease in beam current.
- Initial tests of a metallic Faraday shield were successful after modification…

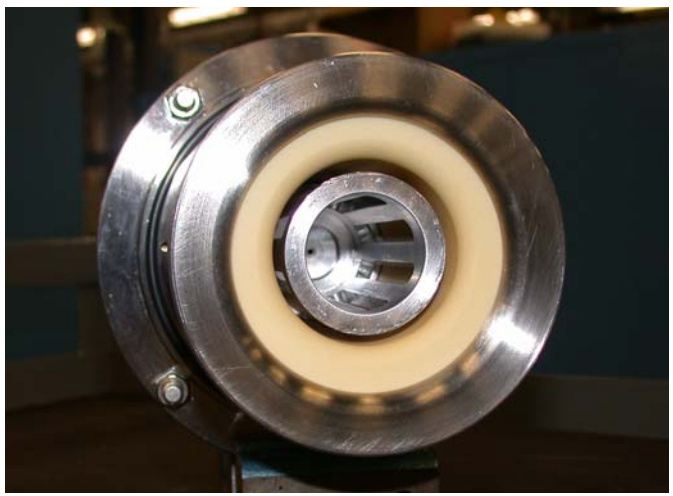

Produced ~ 8 mA (~84% decrease)

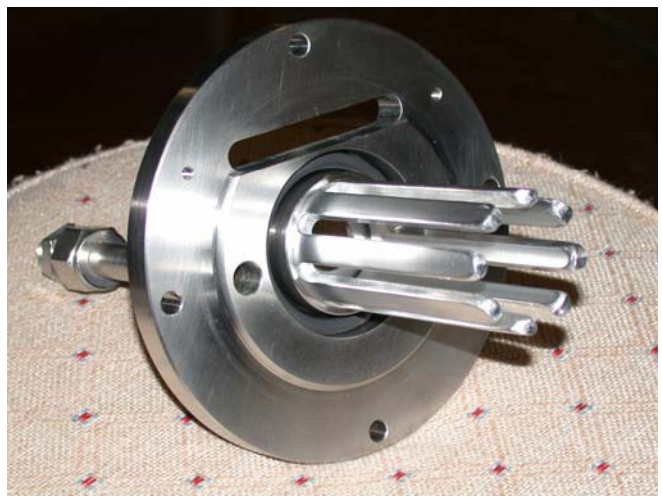

Produced ~ 40 mA (~20% decrease)

Lessons Learned and a New Source Design….

- **Antenna cavity clearance → increasing gaps for higher inductance antennas (better RF coupling) and reduced antenna arcing**
- **Magnetic plasma confinement → should improve source performance likely reducing the ~30% droop observed with 1.2 ms pulses**
- **Heat management of plasma chamber → required for high duty-factor operation → currently limited to 1.4 kW out of 3.6 kW of plasma heating insufficient for cesiation**

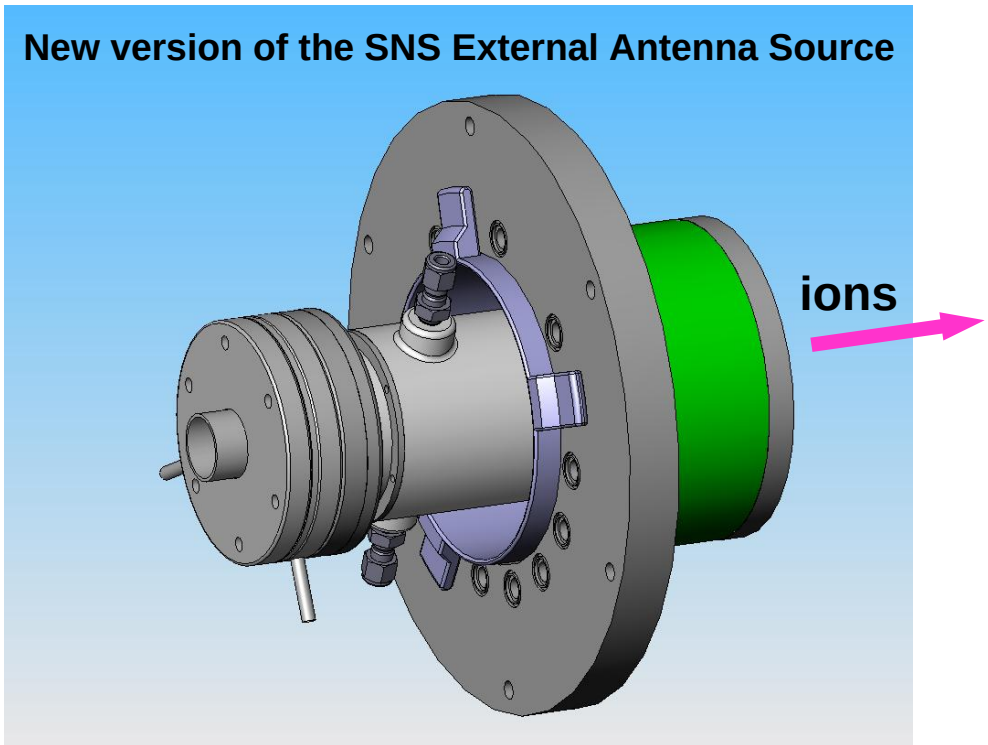

New Design…Antenna Cavity Clearance

- **We increased the radial cavity dimension to maximum while still utilizing the LBNL outlet aperture, Cs collar, filter field, e-dump magnets.**
- **Gap increased from 0.4 to 1.0 inch**

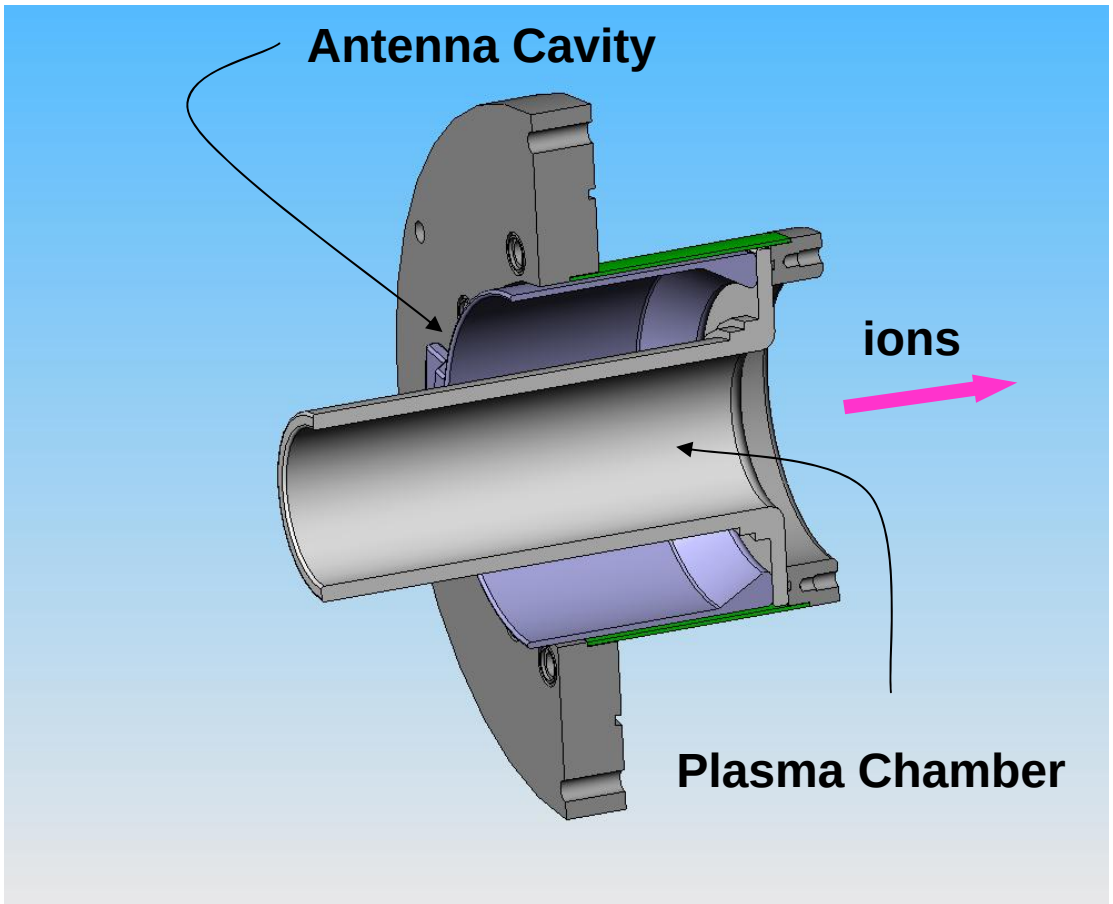

New Design…Magnetic Confinement

- We have already shown that with stainless steel fingers inserted into the plasma chamber we can produce 40 mA of H^-. Why not incorporate multicusp magnetic confinement into water-cooled fingers which also serves as a Faraday shield?
- How good could this confinement scheme be?

Multicusp fingers

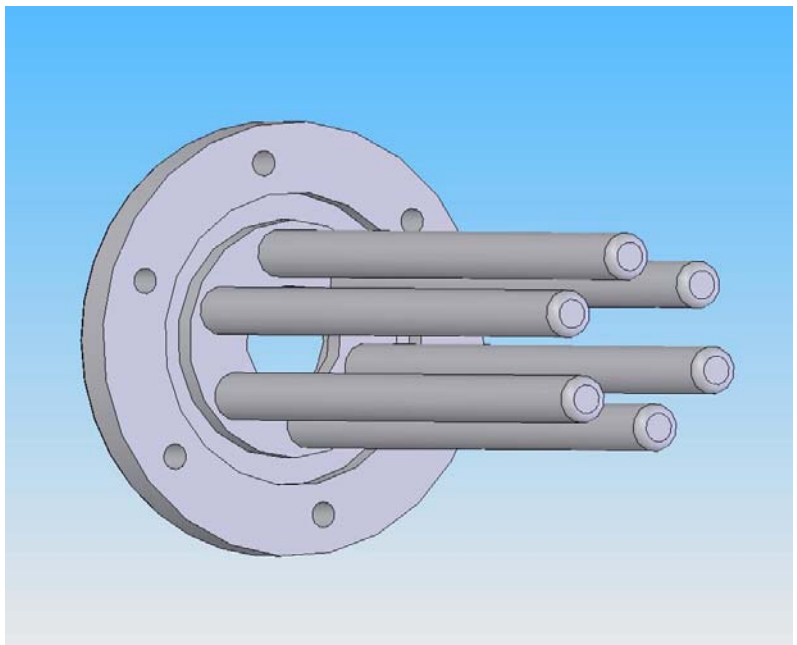

Water manifold

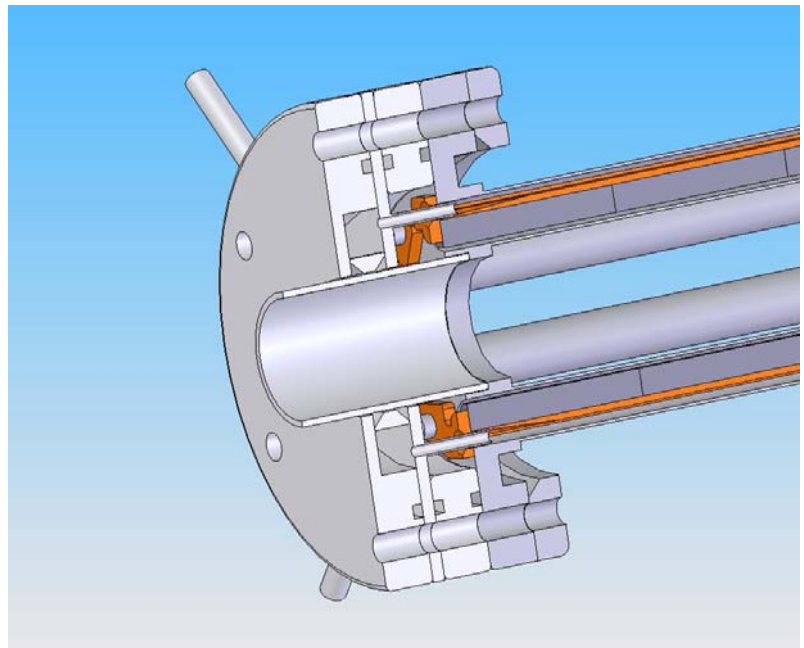

New Design…Magnetic Fields

- **If we magnetize the magnets in the azimuthal direction rather than the conventional radial direction and properly shaping pole faces an N=12 multicusp configuration can be achieved using only 6 magnets!**

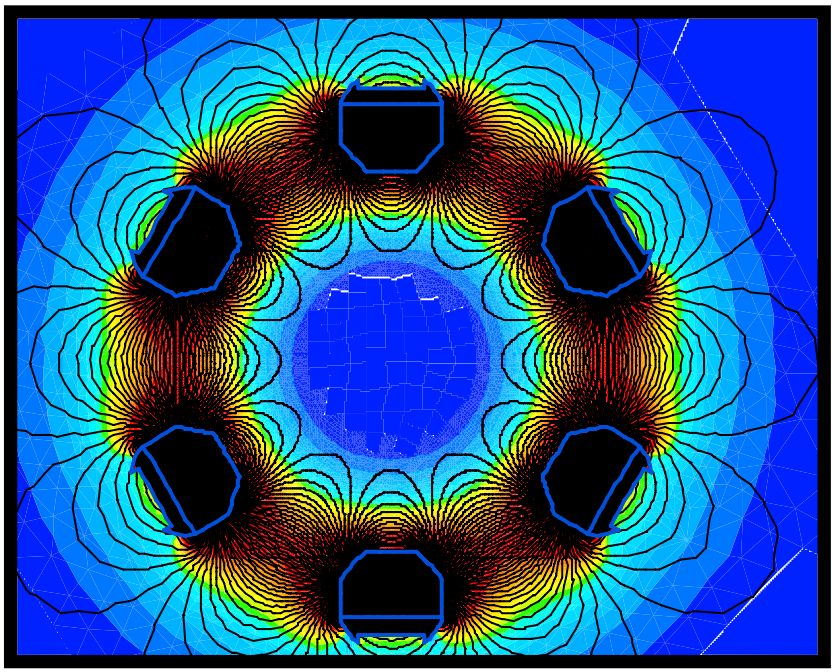

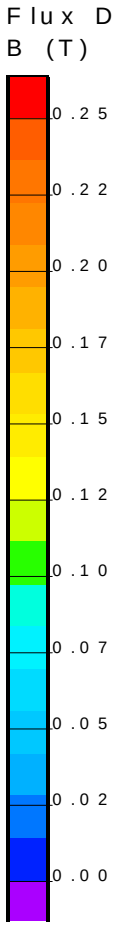

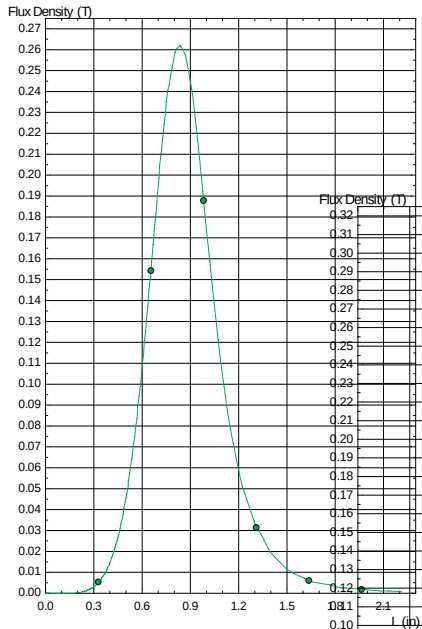

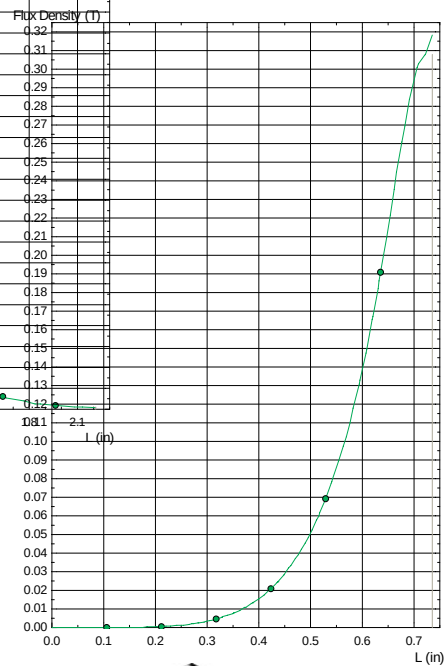

- **Provides comparable confinement with the LBNL source: B(max) = 2600G and 3000 versus 2200 G.**
- **B at antenna is <100G**
- **Confinement extends over full plasma length including extraction region!**

New Design…Heat Management

- **The 3.6 kW plasma heat source is considerable and the following measures must be taken together to manage this heat load:**
  - **Chamber enlarged to reduce heat flux: surface area increase → 56% increase in surface area.**
  - **Water cooled multicusp assembly serves as a Faraday shield → ~50% transparency**
  - **Water/Fluorinert rapidly flows over the outer surface of the plasma chamber in a thin plastic water jacket – glass reinforced Delrin.**

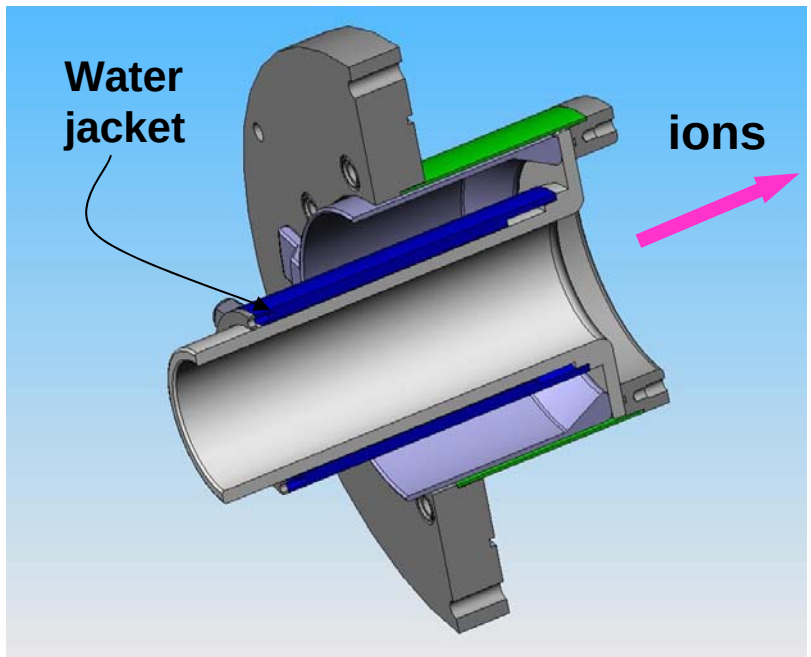

New Design….Temperature and Stress Distributions

Temperature distribution

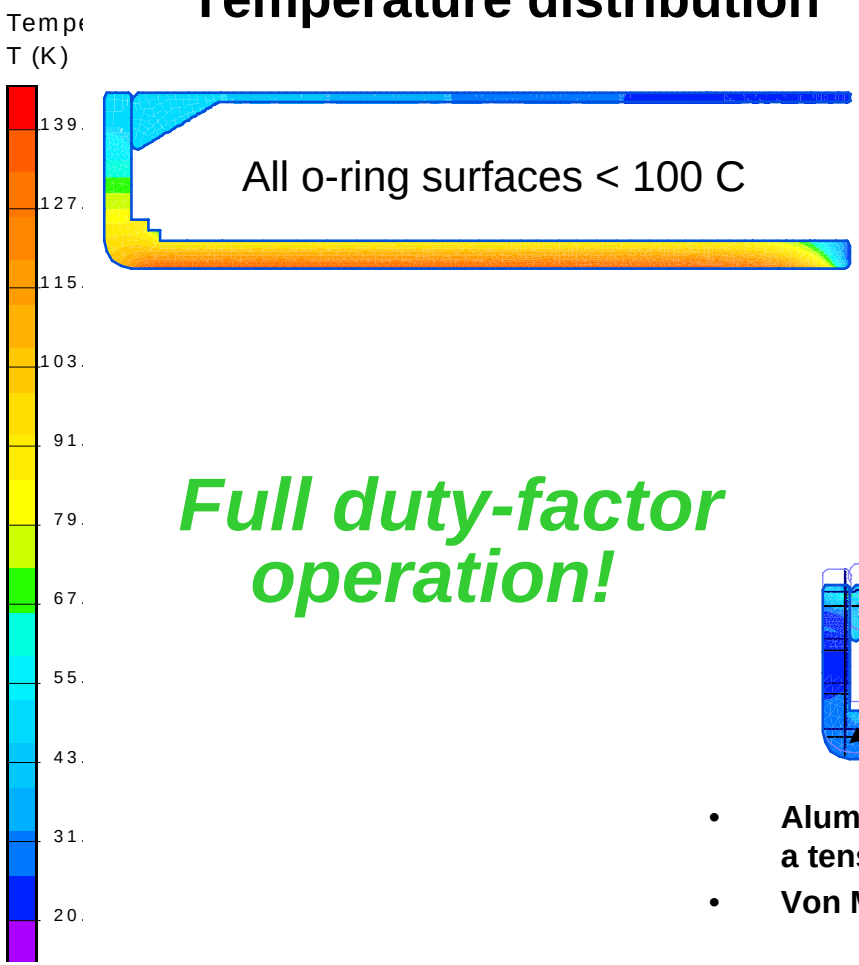

Full duty-factor operation!

Thermal and Mechanical stress distribution

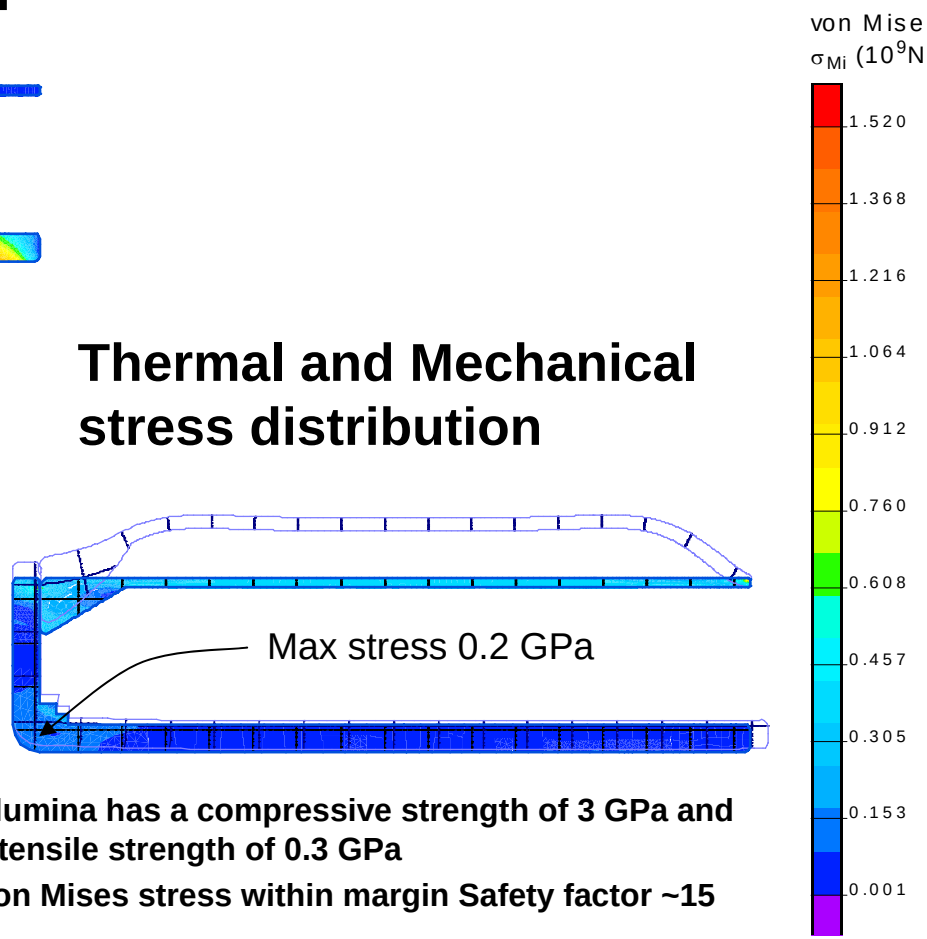

- **Alumina has a compressive strength of 3 GPa and a tensile strength of 0.3 GPa**
- **Von Mises stress within margin Safety factor ~15**

New Design….Overall Assembly

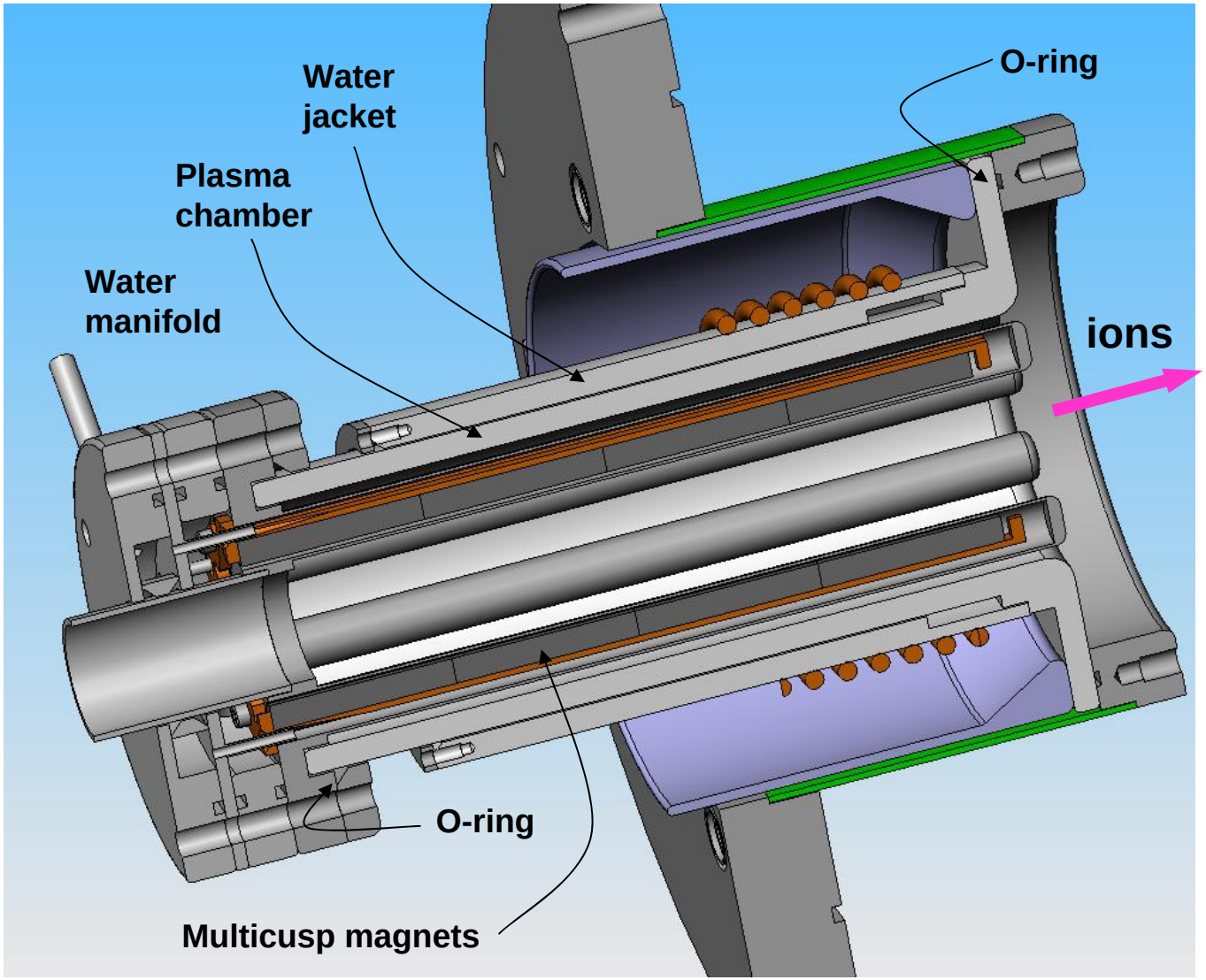

- Highly modular design allows individual optimization of each subsystem
- Water flows through multicusp array via the end cap manifold
- Ceramic plasma chamber is loaded in compression only.
- The electron gun will be affixed to Std. 1.25” Cajon fitting to the rear of the source
- Matrix supports new source concepts like the Helicon plasma generator
- Status: Assembly drawings done, layouts being made.

Other Source Development Efforts

Risk is mitigated by pursuing several alternative approaches…..

- **Continuing Lifetime Tests of LBNL Source**
- **Developing New Cs Collars**
- **Developing High-Field Extraction System as employed at DESY, FNAL, JAERI, KEK, BNL, etc. (not discussed today)**
- **Helicon Plasma Generators with FED (not discussed today)**

New Cs Collars

- **Motivation:** Current Cs collar is not optimized (indirect Cs transfer), does not meet the SNS requirement and only supports ~3 cesiations. Development benefits both the internal and external antenna sources
- **Progress:** We are developing Cs collars with **enhanced geometry, temperature distributions and Cs sources**
- **Details:** RF Welton et al., AIP Conf. Proc. 763 (2005) p 296

Enhanced geometry: Integrated Cs Collar / Outlet Aperture

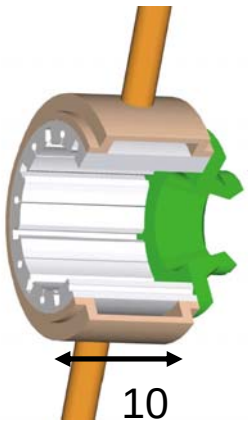

- Employs a conical ionization surface which extends into outlet aperture
- Larger emittance observed

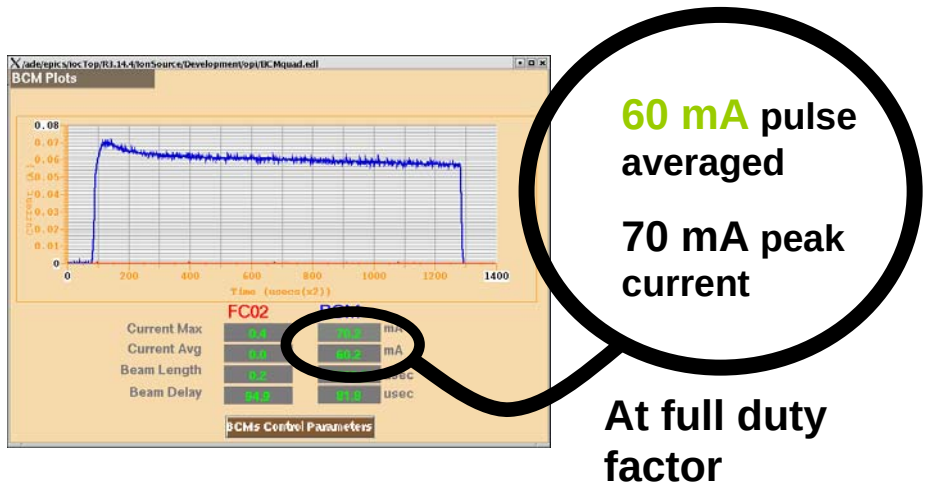

New Cs Collars

Enhanced Temperature Distributions:

Direct-Transfer Collar

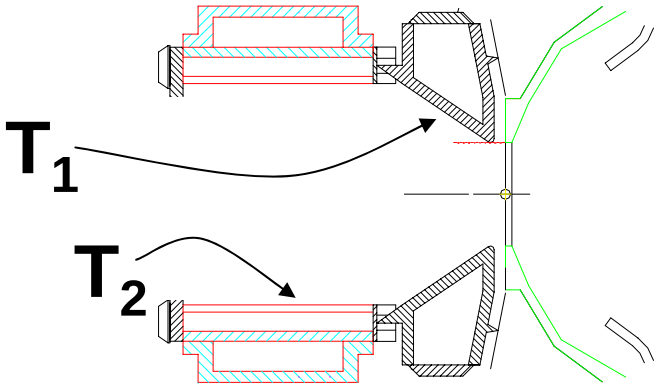

- Design allows complete and independent temperature control of T_1 & T_2 (30-650 C)
- Produced ~50 mA with T_1 = 211C and T_2 = 585C at 1.2 ms in spite of damaged antenna

Improved Cs source:

External Cs Reservoir

X-ray diffraction analysis shows a complete absence of Cs chromate after ~3-4 cesiations in original LBNL Cs collar: need a better Cs source!

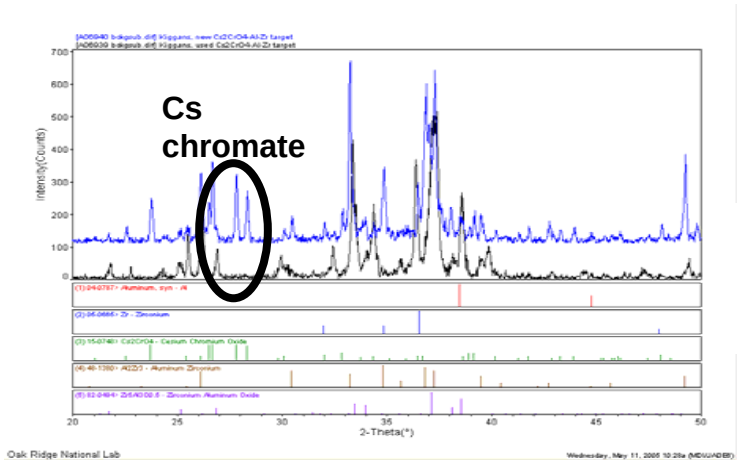

New

Used

New Cs Collars – Combining best features

- **Does not depend on the complex and delicate chemistry of the Cs_2CrO_4 – Zr_3Al_2 – Zr_5Al_3 system**
- **Based on Fermi Lab magnetron Cs oven which operates reliably for 6+ month intervals**

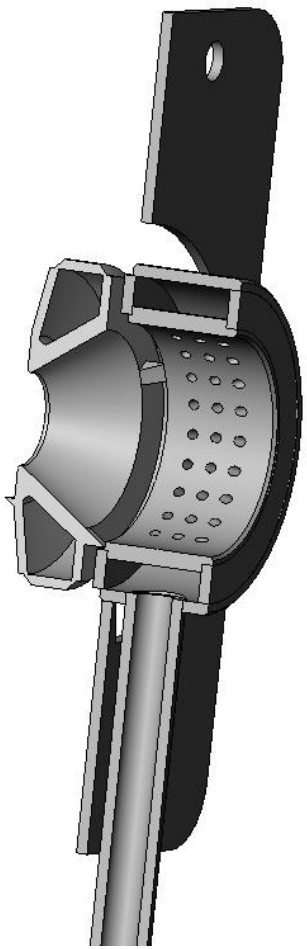

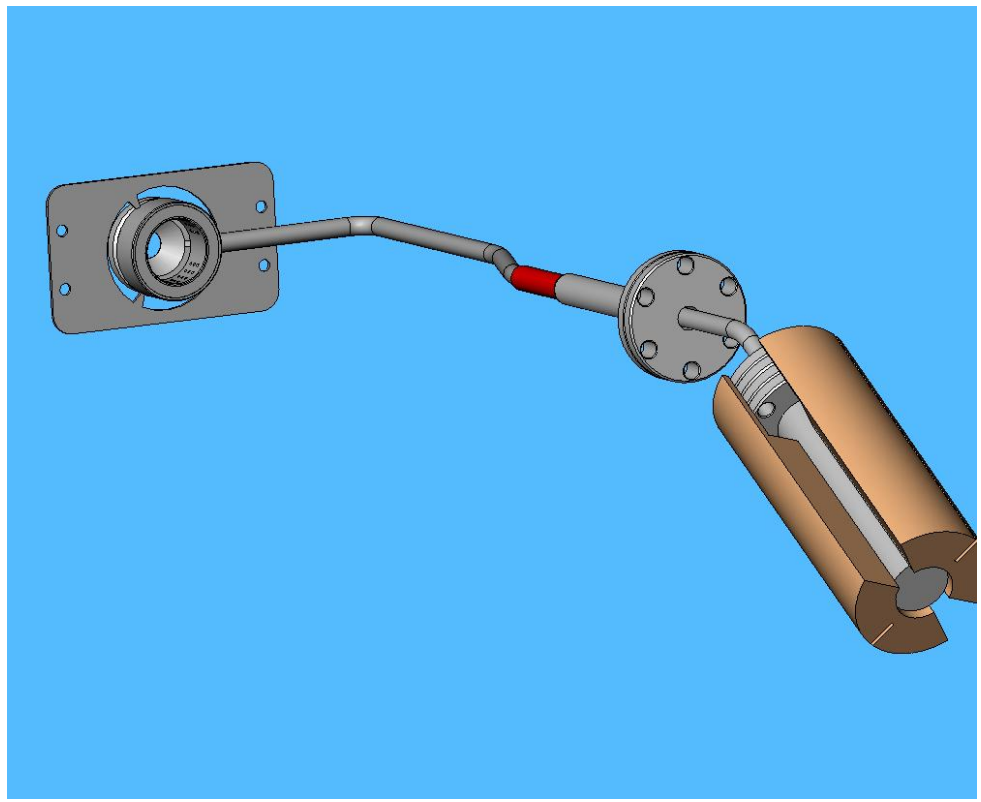

- **Status – system being constructed**

Outlook

- At low duty-factor (<1%), the LBNL ion source continues to meet the commissioning goals of the SNS Accelerator with availability increasing from eased from 86% to 99% for the last commission period.
- At full duty-factor (7%), a new source conditioning procedure has resulted in an order-of-magnitude improvement in beam persistence allowing beams of excess of 30 mA to be delivered continuously for ~16 days from the original LBNL source. Previously, beams of this level could only be sustained for periods of several hours.
- The SNS external antenna module and hollow anode E-gun have produced 51 mA of H^- without any plasma confinement or use of Cs. Cs typically increases H^- output 2-3 fold. Issues of long-pulse, high duty-factor and Cs-enhanced operation are being addressed in a new source configuration which has been designed and will be tested shortly.
- New Cs collars have already produced beams of 60 mA at full duty-factor 7% but at the cost of unacceptable emittance growth using the internal antenna source.
- Overall – It seems likely that given the 1-2 year time window to meet the SNS operational requirement of 40mA at 7% we will achieve this. Meeting the SNS power upgrade goal of 75-100 mA at 7% in the 3-5 years window will be a considerably more challenging requiring more funding and effort.